STRUCTURLAM MASS TIMBER CORPORATION

HANDLING, STORAGE, ASSEMBLY & INSTALLATION RECOMMENDATIONS

JUNE 2016

A RESPONSIBILITY STATEMENT

As a product supplier, Structurlam Mass Timber Corp. has been contracted to provide materials as outlined in our quotations(s). The quote was prepared, based on information provided by the owner, contractor, or others.

Structurlam Mass Timber Corp. is not responsible for the design, engineering, or code verification of ANY beams, trusses or steel connections detailed on these drawings, unless specifically noted otherwise. Responsibility for the design and structure is solely that of the project Architect, project Engineer and others.

All drawings are to conform with contract and purchase order specifications. These drawings must be read in conjunction with the Architectural, Structural, and all other applicable drawings for this project. Verification of dimensions, elevations, slopes, member size, lengths and all connections shall be done by others as part of the Offered For Approval (OFA) process.

Drawings are issued as noted, and should not be used for any other purposes except for reference and installation of Glulam/CrossLam and related installation components. Only the most recent set of IFC drawings may be used for assembly.

- Unloading instructions, lifting points, and erection procedures are the responsibility of the contractor. If engineering of these is required it is supplied by others.
- The design of any supplemental shoring, scaffolding, etc. shall be provided by a registered professional engineer specialized in this field (as required by law). The contractor is solely responsibly for attaining these services at any additional costs.

B HANDLING AND ASSEMBLY

1. GENERAL INFORMATION

Structurlam Mass Timber Corp. (Structurlam) has taken every precaution possible to ensure that you are receiving the very best quality product that we can produce. Although we can't anticipate every possible job site situation, experience has taught us that customers who follow these instructions have the greatest chance of a successful construction experience with our Glulam and CrossLam. Our product requires care when handling to ensure a clear, unmarred surface in the complete structure, so please take extra care when handling and installing this material.

The erection of a Glulam and CrossLam structure requires experienced erection crews and adequate lifting equipment to protect lives, property and to ensure that our product is not damaged during handling and improperly assembled. The unloading and storage of Glulam/CrossLam members before erection also demands care and good judgment.

2. UNLOADING AND HANDLING

Carefully inspect condition and quantities of the material while still on the truck. If material is missing or has been damaged in transit: note the units missing, the type of damage, and the number of units involved on the driver's bill of loading or delivery receipt before you accept delivery. If you can learn from the driver exactly how the damage occurred, record this information as well. Inform Structurlam immediately of any damaged or missing material.
STRUCTURLAM CANNOT BE HELD RESPONSIBLE FOR ANY MISSING or DAMAGED MATERIAL NOT REPORTED WITHIN 3 DAYS of DELIVERY

Glulam/CrossLam Products are subject to surface marring and damage when not properly handled and protected. At the erection site, the following precautions are suggested:

a)Do not walk on unprotected Glulam/CrossLam or handle the material with soiled hands or equipment.
b)Unload trucks and move members by using lifting equipment; do not drag, dump or drop members.
c)Use wide fabric or plastic belts or other slings that will not mar the wood. If chains or cables are used, provide protective blocking or padding to protect members from damage.
d)Guard against soiling, dirt, footprints, or abrasions. If members are wrapped, avoid tearing, damaging or removing the protective wrapping except as noted below.

"HANDLING TIPS"
- Use nylon slings
- Do not dump off truck
- Handle beams with care to prevent structural damage
- Avoid lifting glulam beams in flat orientation

2. UNLOADING AND HANDLING CROSSLAM

Please refer to CrossLam unloading and handling guidebook. Contact Structurlam for a copy if necessary.

3. STORAGE

Glulam/CrossLam is a specialized product and requires extra care and attention. Think of, and treat it as you would your millwork! The best plan for storage is to eliminate or minimize it altogether. Proper coordination between delivery and erection be placed on level ground on blocks raised 6"-12" off the ground. Individual members should be separated by 1-1/2" thick spacers (2x4) around all four sides. The top and all sides of storage piles should be covered with moisture-resistant material. Clear polyethylene films should not be used because wood members are subject to bleaching from sunlight. Individual wrappings should be slit or punctured on the bottom side to permit drainage of moisture that may have accumulated inside the wrapping due to damaged wrappings or condensation. *THIS IS VERY IMPORTANT TO PREVENT FUNGAL GROWTH*

Use water-resistant wrapping for in-transit protection of Glulam members, leave intact until members are enclosed in the building. If wrapping must be removed at connection points during erection, it should be replaced after the connection is made. Exposure to the elements will alter the appearance of the Glulam/CrossLam members and therefore should be avoided. Prolonged exposure to weather may adversely affect the strength of the product and potentially void the warranty.

ADVERSE WEATHER CONDITIONS
RAIN & MOISTURE

If unprotected, rain will cause staining of the members. Bolts and steel connectors that are not galvanized are prone to rusting and shall be stored in covered areas away from moisture. Rust can stain the Glulam members. Bolts or steel covered with protective oil or grease must be cleaned prior to installation, as the oil can stain Glulam/CrossLam

COLD WEATHER

The sudden application of heat to a building in cold weather can rapidly change the moisture content of Glulam/CrossLam members. This can affect the structural integrity and visual aesthetics of these members. It is important that care is taken during transit, storage and throughout all stages of construction to avoid rapid change in moisture content of Glulam/CrossLam. We recommend the following when applying heat to a building:

- Gradually increase the heat in the building over a two to three week period, up to normal temperatures. This will ensure a gradual change in the moisture content in the Glulam/Crosslam members.
- Do not direct any forced air heating systems onto the Glulam/CrossLam members.
- Regulate all heating units. Rising hot air can produce temperatures at the ceiling that can exceed 37 °C (100 °F).
- This is normally where the Glulam/Crosslam members are located.
- Maintain normal relative humidity in the building, monitor if necessary.
- If possible, try to apply the specified finish to all Glulam/CrossLam members before heat is applied, this can help to regulate any change in moisture content.
- Consult with the project Architect regarding the application of any finishes.

SURFACE CHECKING GLULAM & CROSSLAM

Glulam is manufactured with strict requirements regarding materials, strengths and moisture content. Accepted standards state that kiln dried lumber be used at a moisture content of 7%-15% (CSA 0122). These values are the approx. normal moisture contents that result in reduced checking of Glulam members. Glulam members installed in conditions which will result in a lower equilibrium moisture content may develop some "seasonal checking". Any rapid changes in moisture content that occur after the gluing process will result in high stresses in the wood fibre and glue joints. Due to the inherent differences in the shrinkage rates between the wood laminations, the stresses tend to occur at or near the glue lines.

REDUCING CHECKING

- Ensure the Glulam members are stored properly (see storage recommendations).
- Once the building has been enclosed, the temperature should be raised slowly over several days. In dry conditions with low humidity, the space should be humidified at a low temperature to allow the Glulam to equalize slowly over next few weeks.
- Single coat of shop sealer is intended as temporary protection only. Once the building has been enclosed and the Glulam allowed to come to equilibrium (see above) you may apply final coatings as per Architectural guidelines and specifications.

5. ASSEMBLY SUGGESTIONS for TRUSSES

GENERAL: If on-site Glulam assembly or truss assembly is required, assembly shall be by a qualified crew.
(Preferably supervised by a seasoned foreman with experience assembling Glulam or timber trusses).

a) Trusses are shipped completely or partially assembled. Final assembly should be on the ground at the site before erection. It is critical to start with a well graded level work area with adequate size to allow movement of material and equipment.
b) Place an adequate number of assembly supports below the top and bottom chords and webs in order to keep the truss members level during assembly. Thought must be given to the required size and strength of the assembly supports depending on the total weight of the truss(es) they are supporting and the soil conditions. These supports should be very stable and be of a minimum height to allow for installation of steel connections and hardware from below if required.
c) Check elevation, level and plumb all assembly supports before laying out glulam members.
d) Using our construction shop drawings as a guide, layout the truss top and bottom chords on the assembly supports being careful to ensure that all truss members are level, plumb and square. This is a critical step, the more precise the initial layout is, the easier the following steps will be to complete.
e) Loosely fit connection steel at the appropriate locations on the truss chords. Use alignment bars to align holes between steel and wood members. Keep steel in place by installing two bolts (and washers as required) with nuts finger tight. Install bolts at chord splices first. Be sure to install all bolts in the same direction.
f) Layout web members and corresponding steel connection. Align all holes and fittings with the proper size of alignment bars. Install one or two bolts (and washers as required) with nuts finger tight.
g) Starting with the largest connection (usually the heel connection) install bolts, nuts and washers working from outside towards the middle of the connection. Leave all nuts finger tight until all bolts are in place on entire truss.
h) Tighten all nuts to "snug tight". It is recommended that all nuts be re-tightened after the trusses have been installed and the dead load applied. It is also recommended that all nuts be re-tightened after one year after installation.
i) Before erection, the truss should be checked for accuracy, camber, and if anchor connection dimensions. Erection should be planned and executed in such a way that the close fit of joints and the structure as a whole will not be impaired.
j) If possible, assemble the second truss on top of the first truss in order to establish correct geometry. Place assembly supports for the second truss at the same locations as the first truss, taking care not to damage any materials.
k) It is generally most efficient to attach or identify locations for any bracing and/or purlin connection hardware while the trusses are still on the ground.
l) DO NOT DRILL, BORE, NOTCH, CUT, ALTER OR REPAIR IN ANY WAY ANY STEEL , GLULAM OR CROSSLAM MATERIAL. IF YOU HAVE ANY QUESTIONS OR PROBLEMS CONTACT STRUCTURLAM PRODUCTS

6. INSTALLATION of BEAMS, PURLINS, and ARCHES.

Unless specifically noted, these drawings do not indicate the method of construction. Erection and installation procedures, means and methods are the responsibility of the erection contractor. The contractor shall provide all material, bracing and equipment necessary to protect the structure, workmen, and other persons and property during construction. The contractor at his expense shall engage properly qualified persons to determine where and how precautionary measures shall be used.

The Glulam members shall be installed in accordance with the plans, other drawings and installation guides which may be provided. Temporary construction loads which cause stress beyond design limits are not permitted. Additional holes, cuts or notches are not permitted unless with the expressed written approval of the project structural engineer.

Erect all members such that the unfinished or top surface is oriented up (Typically marked with the name "TOP") Observe beams with a prescribed camber as they must be oriented with the "crown" or camber up.

The weights and balance points of the Glulam members should be determined and verified before lifting begins so that the proper equipment and lifting methods may be employed. When members or trusses of long span are raised from a flat to a vertical position preparatory to lifting, stresses entirely different from the normal design stress may be introduced. The magnitude and distribution of these stresses will vary, depending on such factors as weight, span and type of member. A competent rigger should consider these factors in determining how much suspension, stiffening (if required) and where it should be located.

FINAL ALIGNMENT

Final tightening of any alignment bolts should not be completed until the dead load has been applied and the structure has been properly aligned.

- No construction loads are to be applied to beams until they have been permanently braced and all connecting hardware has been properly installed.
- Failure to provide adequate erection bracing may result in beam failure and injury to workmen.

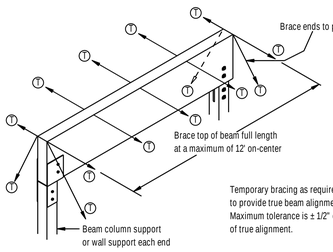

WARNING
WITHOUT CORRECTLY INSTALLED ERECTION BRACING, TRUSSES AND BEAMS CAN BOW AND ROLL OVER CAUSING DEATH OR SERIOUS PERSONAL INJURY AND PROPERTY DAMAGE.

NOTICE
ERECTION BRACING AND PROCEDURES, AS WELL AS THE SAFETY OF THE WORKERS, ARE THE RESPONSIBILITY OF THE ERECTOR. THE ERECTOR SHOULD MAKE SURE THAT THIS INSTALLATION INFORMATION IS UNDERSTOOD BY ALL PERSONS INVOLVED IN THE TRUSS AND BEAM INSTALLATION.

FIT & FINISH

It is important to consider the combined effects of manufacturing tolerances when evaluating the fit and finish of the final assemblies.

- All Glulam and CrossLam materials supplied by Structurlam are manufactured to accepted industry standards.
- Upon final assembly it is normal to find spaces or gaps between connecting members. Site reaming, drilling and cutting may be required to achieve proper fit. This is considered to be standard erection procedure.
- Glulam and CrossLam materials are heavy timber elements that are not manufactured to millwork quality and tolerances. Fair amount of tolerance and torn grain is to be expected and is considered to be within an acceptable standard.
- If available at the time of production Structurlam will test fit shop manageable steel connections that are complex in nature and/or require critical alignment.

ERECTION TIPS

- The following are suggested guidelines only. National and/or local construction codes govern.
- Temporary bracing must be provided by the contractor to keep beams plumb and true. This bracing shall be left in places for as long as may be required for safety.
- Part or all of the permanent bracing may also act as erection bracing.
- Joists, purlins or trusses attached to the beam can provide part of the permanent bracing on supporting beams, purlins, etc.. Consult with the project structural engineer.

GENERAL NOTES:
1. NOT ALL STRUCTURAL ELEMENTS APPEAR ON THESE DRAWINGS; ONLY ELEMENTS SUPPLIED BY STRUCTURLAM PRODUCTS AND OTHER ELEMENTS PERTINENT FOR REFERENCE APPEAR.
2. GLULAM BEAMS WILL BE SUPPLIED WITH LIMITED FRAMING WHERE THEY ATTACH TO STEEL CONNECTIONS SUPPLIED BY OTHERS.
3. ALL HARDWARE FOR STEEL CONNECTIONS BY OTHERS TO BE SUPPLIED BY OTHERS U.N.O.
4. ALL WOOD PLUGS SUPPLIED BY OTHERS

SELF-TAPPING SCREWS

Refer to individual screw manufacture for complete specifications and installation guide. The following pertains to ASSY screws into D.Fir & Spruce-Pine-Fir.
Pre drilling may reduce withdrawal capacity of screw. Consult with structural engineer before pre drilling

D.Fir & Spruce-Pine-Fir / 6 mm Screws **Spruce-Pine-Fir. / 8 mm Screws** **D.Fir. / 8 mm Screws**	Installing 6 mm screws, no pre-drilling required. Installing 6 mm screws, no pre-drilling required up to 580 mm long screws. Installing 6 mm screws, no pre-drilling required up to 480 mm long screws. Pre drilling suggested (VG series) for 8mm and >480mm long. Pre drill with 0.7x8mm (5mm or 13/64") for 15% of screw length. No pre-drilling required for Kombi, SK, and Ecofast series.
Spruce-Pine-Fir. / 10 mm Screws **D.Fir. / 10 mm Screws**	Installing 10mm screws, no pre-drilling required up to 800mm long screws. Installing 10mm screws, no pre-drilling required up to 480mm long screws. Pre drilling suggested (VG series) for 10mm and >480mm long. Pre drill with 0.7x8mm (6.5mm or 1/4") for 15% of screw length. No pre-drilling required for Kombi, SK, and Ecofast series.
Spruce-Pine-Fir. / 12 mm Screws **D.Fir. / 12 mm Screws**	Installing 12mm screws, no pre-drilling required up to 1200mm long screws. Installing 12mm screws, no pre-drilling required up to 380mm long screws. Pre drilling suggested (VG series) for 12mm and >380mm long. Pre drill with 0.7x8mm (7.5mm or 19/64") for 20% of screw length.
Required Machinery	Use low RPM drill with high torque for 6mm to 8mm screws Use low RPM drill with high torque for 10mm to 12mm screws **Use a specified torque wrench & recorder for all splice connections** Do not use impact drills Use AW drive bits for all ASSY screws types
During Installation	Drilling must be continuous, one run, do not stop during screw installation. Use safety gear as required Use drill with clutch when installing screws in steel to wood connections.

BEAM TERMINOLOGY

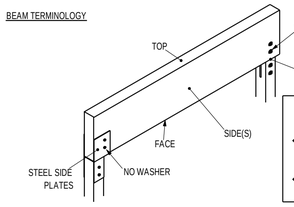

WASHER USE
(AS SHOWN IN THE PICTURE TO THE LEFT)
- NEVER USE WASHERS FOR MACHINE BOLTS OR LAG SCREWS WHERE THE BOLT HEAD OR NUT WILL CONTACT A STEEL PLATE BEFORE WOOD.
- ALWAYS USE WASHERS IF THE BOLT HEAD OR NUT WILL DIRECTLY COME INTO CONTACT WITH WOOD.

C DRAWING REFERENCES & ABBREVIATIONS

CROSSLAM NAME CONVENTION

PANEL SERIES PANEL FINISH NAME POSITION #
191 VJ-1 RP16

PANEL THICKNESS IN mm

GRADE INDICATOR
V = V series: V2M1,V2M1.1, V2.1
E = E series: E1M4, E1M5

J-1 : ONE SIDE SPF J GRADE, VISUAL GRADE
D-1 : ONE SIDE D.FIR LUMBER, VISUAL GRADE
J-2 : TWO SIDES SPF J GRADE, VISUAL GRADE
D-2 : TWO SIDES D.FIR LUMBER, VISUAL GRADE
NO LABEL: Non Visual Industrial Panel

CROSSLAM NAME DESIGNATIONS:
EC - Elevator Core Panel RP - Roof Panel
FP - Floor Panel WP- Wall Panel

GLULAM NAME CONVENTION

B35
GLULAM CALLOUT: SEQUENTIAL NUMBER

A -ARCH
B -BEAM
BC -BOTTOM CHORD
BR -BRACE
C -COLUMN
D -DIAGONAL
H -HORIZONTAL
HR -HIP RAFTER
P -PURLIN
R -RAFTER
RB -RIDGE BEAM
TC -TOP CHORD
V -VERTICAL
VR -VALLEY RAFTER

STEEL CONNECTION NAME CONVENTION

W10
STEEL CONNECTION CALLOUT: SEQUENTIAL NUMBER

W -WELDED CONNECTION
R -ROD CONNECTION
PL-SINGLE PLATE CONNECTION
AN-ANGLE CONNECTION

ABBREVIATIONS & LEGEND

AESS	-	Architectural Exposed Structural Steel	GL	-	GRIDLINE	**RND**	-	**ROUND**
			HDG	-	HOT DIPPED GALVANIZED	SMC	-	Structurlam Mass Timber Corporation
B/S	-	BOTH SIDES	HRZ	-	HORIZONTAL	TYP	-	TYPICAL
B.O.	-	bottom of	LS	-	LAG SCREW	THRD	-	THREADED
CBORE	-	COUNTERBORE	MB	-	MACHINE BOLT	T.O.	-	TOP OF ____
CSINK	-	COUNTERSINK	MAX	-	MAXIMUM	TR	-	THREADED ROD
CON	-	CONNECTION	MIN	-	MINIMUM	U/N	-	UNLESS NOTED
CL	-	*CrossLam* ™	M/S	-	Machine Screw	U/NO	-	UNLESS NOTED OTHERWISE
C/W	-	COMES WITH	N/A	-	NOT APPLICABLE	U/S	-	UNDER SIDE
DP	-	DEEP	**N/S**	-	**NEAR SIDE**	VRT	-	VERTICAL
E/S	-	EACH SIDE	O/C	-	ON CENTER	...	-	....
F/S	-	FAR SIDE	PL	-	PLATE	...	-	....
F/W	-	FLAT WASHER (WIDE)	REQ	-	REQUIRED	...	-	....

PL.. R.. W.. - Steel Connectors Provided by SPL
D - Detail name / Reference Sheet Shown
S SL10 - Section name / Reference Sheet Shown
V SL10 - View name / Reference Sheet Shown

D CONTACT US

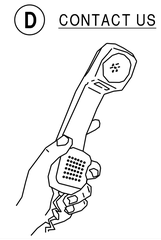

IF YOU HAVE ANY OF THESE PROBLEMS:

- Damaged Glulam Material
- Damaged CrossLam Material
- Damaged Steel Connections
- Improper Fit
- Field Modifications
- Questions About These Drawings

Call our Coordinator: *Project Coordinator (varies per project)*

Phone: *250-492-8912*

E

1.GULAM MEMBERS

Structurlam standard manufacturing tolerances and specifications for GLULAM at time of fabrication.
Specs as per project specifications to the right or as per CSA-0122 / CSA- 086 / ANSI 190.1

Standard lamina thickness	38mm (1 - 1 1/2") U.N.O.
Lumber moisture content	8% - 15%
Camber	NONE, U.N.O. (see member schedule)
Width	+/- 2 mm (0.079")
Depth	+/- 0.4 mm/ lamina to max +/- 6 mm +/- 0.016"/ lamina to max +/- ¾"
Length	+/- 6.4 mm
Straightness	+/- 6 mm/ 6000 mm of length up to 19 mm +/- ¼"/ 20' of length up to ¾"
Hole Location	+/- 3 mm (1/8")
Holes diameter	+/- 3mm (1/8") 0 mm – size for pin.
Notches/daps/cuts	+/- 3 mm (1/8")
Slots	3 mm (1/8") wider than plate thickness

2.CROSSLAM MEMBERS

Structurlam standard manufacturing tolerances and specifications at time of fabrication. As per APA/EWS PRG 320.

Standard lamina thickness	35 mm (1- 3/8") U.N.O. @ +/- 2 mm
Lumber moisture content	12% @ +/-3%
Adhesive	Purbond Polyurethanne
Width	+/- 3 mm (1/8")
Thickness	+/- 2%
Length	+/- 6.4 mm (1/4")
Spline Framing	Tolerance gap 2 mm +/- 1mm
Holes dia.	3 mm (1/8") larger than bolt.
Slots	3 mm (1/8") wider than plate thickness.

2.STEEL CONNECTIONS

The following specifications deal with the manufacturing of steel connections, raw materials such as I-beams, W-profiles, Channels and Angles will have their own tolerances as per CSA or ANSI standards.

Width	+/- 1.5 mm (1/16")
Length	+/- 1.5 mm (1/16")
Welded plate placement	+/- 1 mm
Welded angular accuracy	+/- 1 deg.
Forming Angular accuracy	+/- ½ deg.
Holes diameter	3 mm (1/8") larger than bolt 1.5 mm (1/16") larger than pin
Hole location	+/- 1.5 mm (1/16")
Welds	Shale conform to CSA W59-M by welders certified by CWB to requirement of CSA-W47.1 (Div.2 Minimum)

3. PRE-ENGINEERED CONNECTIONS

Structurlam standard manufacturing tolerances for pre-engineered connectors assembled to glulam. (Sherpa, Pitzl, Ricon, Megant, etc.)

Location	+/- 3 mm (1/8")
Alignment	+/- 1.5 mm (1/16")

NOTE: Pre-engineered connectors may require site adjustment due to tight tolerances design for assembly.

F DRAWING REVIEW & APPROVAL

Approve and return these drawings as soon as possible. Material will not be fabricated and delivered until approval is received.

Verification of dimensions, details, ETC, are required where indicated, each verification will be assumed correct unless noted otherwise.

All materials shall be furnished as per quote unless specifically noted on shop drawings. I warrant that these Structurlam Shop Drawings have been provided to the contractor and/or installer and all responsible design professionals. I further warrant that these drawings have been verified and/or corrected for accuracy of loading information, consistency with building design, quantities, dimensions and that all verifications shown have been answered. I also agree that erection of the materials is the sole responsibility of the installer.

☐ APPROVED, NO CHANGE Purchaser _____ Date _____

☐ APPROVED, AS CORRECTED By _____ Title _____

FABRICATION OF GLULAM CANNOT BEGIN WITHOUT PURCHASER'S SIGNATURE

PROJECT SPECIFICATIONS

CROSSLAM	
LIFTING INSERTS	None
WALL LIFTING HOLES	None
PANEL TYPE(s)	105 ED-1C, 245 VD-1, 315 VD-1, , , , , ,
CLT GRADE	V2M1.1, V2M1.1, V2M1.1, , , , , ,
WOOD COATING	No Coatings [Bare Wood]
FINISH	Sanded (80-Grit) Visible Side Only
WRAPPING	Bundle Wrap (6 sides Lumber Paper) + Forklift Protection Lumber/Plywood
LENGTH EDGE CHAMFER	1/4" (6mm) @ 45° (Visual Panels Only)
EDGE COATING (PERIMETER)	KP-12UVW
GLULAM	
CERTIFICATION	ANSI-190.1
SPECIES	D-FIR
ADHESIVE	Melamine [Clear]
APPEARANCE GRADE	Architectural
WRAPPING	Individual Poly
WOOD COATING - # COATS	One (1)
WOOD COATING (1ST COAT)	Sansin KP-12UVW
COLOUR	N/A
WOOD COATING (2ND COAT)	N/A
COLOUR	N/A
WOOD COATING (3RD COAT)	N/A
COLOUR	N/A
3RD PARTY INSPECTION	N/A
PRESSURE TREATMENT	N/A
STEEL CONNECTORS	Supplied by STRUCTURLAM
MATERIAL GRADE	ASTM A36, GR50 for Connectors
FINISH	Hot Dip Galvanize per CAN/CSA-G164-M92
SURFACE PREP	SSPC SP-1 Solvent Cleaning
AESS	N/A
3RD PARTY INSPECTION	N/A
HARDWARE (BOLTS)	Supplied by STRUCTURLAM
GRADE/FINISH	ASTM A307 Hot Dip Galvanized
STEEL PINS	Supplied by STRUCTURLAM
GRADE/FINISH	304 Stainless Steel

XL CONSTRUCTION

SUBMITTAL NO.: 112.1
SPEC. SECTION: 06 18 00
XL PROJECT NO: 4441
REVIEWED BY: S.Huynh
REVIEWED DATE: 1/11/2021

Reviewed for General Acceptance Only

This submittal review shall not be construed as a complete check and indicates only the information presented conforms generally with the Contract Documents. The subcontractor or supplier is responsible for all dimensions, correct fabrications, and accurate fit with the work of other trades.

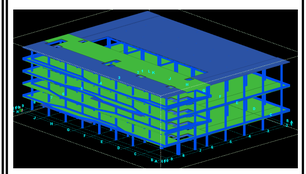

PROJECT INFORMATION

PROJECT LOCATION	1265 BORREGAS AVE, SUNNYVALE CA 94089
ARCHITECT	MGA
ENGINEER	EQUILIBRIUM
CONTRACTOR	

TABLE OF CONTENTS

SL1 PROJECT INFORMATION
SL2 ISOMETRIC VIEW
SL3 LEVEL 1 PLAN
SL4 LEVEL 2 FRAMING PLAN
SL5 LEVEL 2 CLT PLAN
SL6 LEVEL 3 FRAMING PLAN
SL7 LEVEL 3 CLT PLAN
SL8 LEVEL 4 FRAMING PLAN
SL9 LEVEL 4 CLT PLAN
SL10 LEVEL 5 FRAMING PLAN
SL11 LEVEL 5 CLT PLAN
SL12 ROOF FRAMING PLAN
SL13 ROOF CLT PLAN
SL14 SKYLIGHT DETAILS
SL15 ELEVATION GRID LINE 2 & 3
SL16 ELEVATION GRID LINE 4 & 5
SL17 ELEVATION GRID LINE 6 & 7
SL18 ELEVATION GRID LINE 8 & 9
SL19 ELEVATION GRID LINE B & C
SL20 ELEVATION GRID LINE D & E
SL21 ELEVATION GRID LINE F & G
SL22 ELEVATION GRID LINE H & J
SL23 ELEVATION GRID LINE K
SL24 LEVEL 2 CLT HATCH PLAN
SL25 LEVEL 3 CLT HATCH PLAN
SL26 LEVEL 4 CLT HATCH PLAN
SL27 LEVEL 5 CLT HATCH PLAN
SL28 ROOF CLT 6 HATCH PLAN
SL29 BASE CONNECTIONS
SL29A BASE CONNECTIONS
SL30 SECTIONS & DETAILS
SL31 SECTIONS & DETAILS
SL32 SECTIONS & DETAILS
SL33 SECTIONS & DETAILS
SL34 SECTIONS & DETAILS
SL35 SECTIONS & DETAILS
SL36 SECTIONS & DETAILS
SL37 SECTIONS & DETAILS
SL38 SECTIONS & DETAILS
SL39 SECTIONS & DETAILS
SL40 SECTIONS & DETAILS
SL41 CLT SCHEDULE
SL42 BRB STEEL CUT OUT LEVEL 2
SL43 BRB STEEL CUT OUT LEVEL 3
SL44 BRB STEEL CUT OUT LEVEL 4
SL45 BRB STEEL CUT OUT LEVEL 5

Rev	DATE	CHANGE / ISSUE DATE	By	Ch
1	Jan, 6th 2020	SMTC IFF layout revisions	VC	
0	May, 5th 2020	IFF	VC	

STRUCTURLAM MASS TIMBER CORPORATION
Intelligence In Wood
STRUCTURLAM MASS TIMBER Corp. 2176 Government St. Penticton, B.C. V2A 8B5 P. 250-492-8912 F. 250-492-8906
www.structurlam.com

DETAILER

This drawing is the property of SMTC and cannot be used or copied without their written permission.

All Drawings Created with CadWORK 3d V25 & 2d V25

PROJECT: 25991 BORREGAS

SHEET: SL1

DWG TITLE: Cover Sheet

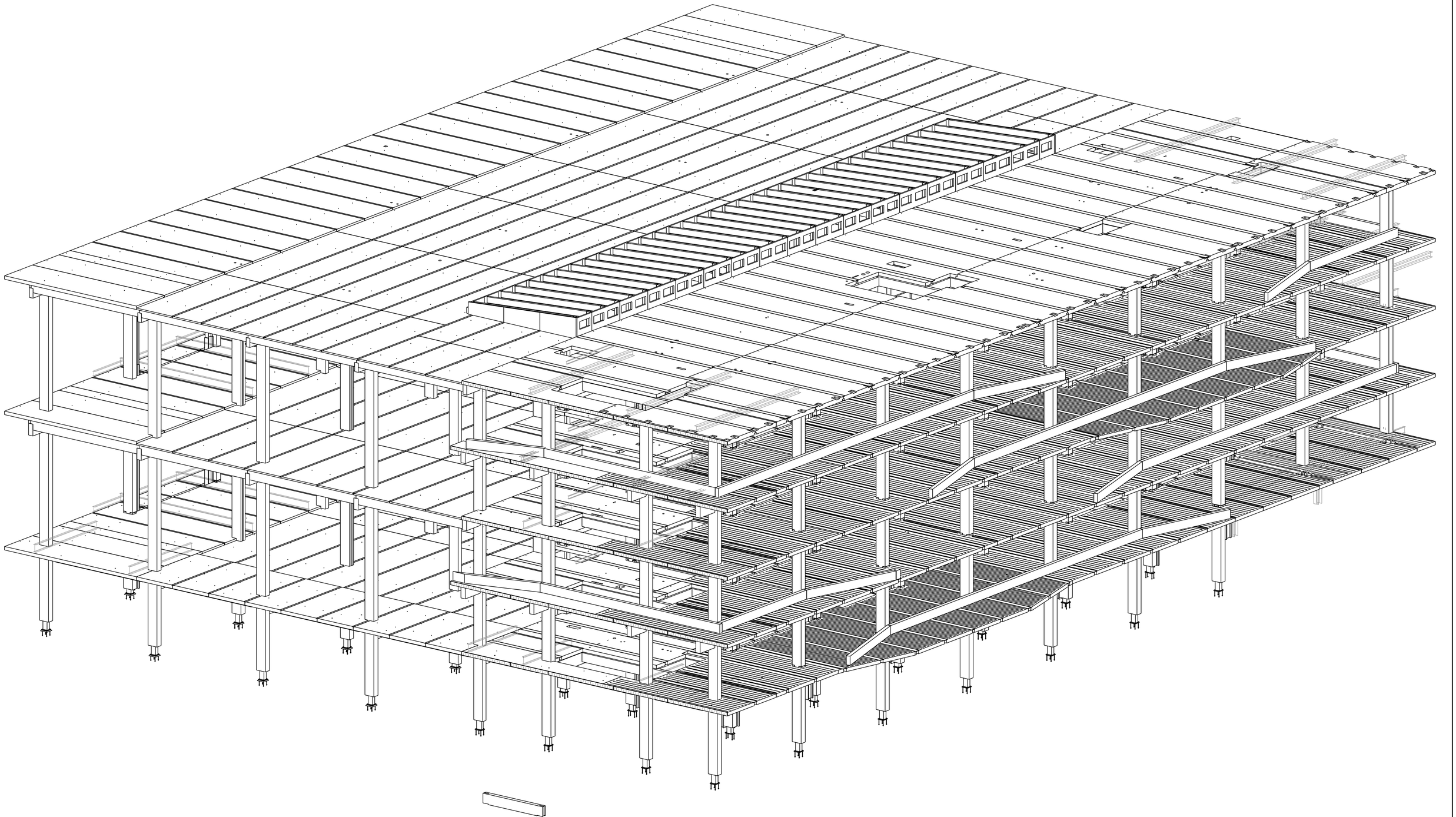

ISOMETRIC VIEW

REV	DATE	REMARKS
0	04/30/2020	IFF
L	03/04/2020	Area B OFA
K	02/05/2020	Area B OFA
J	01/17/2020	Area A OFA glulam
I	12/11/2019	Area A OFA
H	11/18/2019	Area B Geo.
G	11/15/2019	Area B Geo.
F	10/22/2019	Area B Geo.

Ref Dwg:

ISSUED IFF

DATE: 04/30/2020

STRUCTURLAM
MASS TIMBER CORPORATION
Intelligence In Wood

DATE 18/Jul/2019	SHEET	REV.	PROJECT
BY CMI	SL2	0	BORREGAS
DWG TITLE ISOMETRIC VIEW			Job# 25991

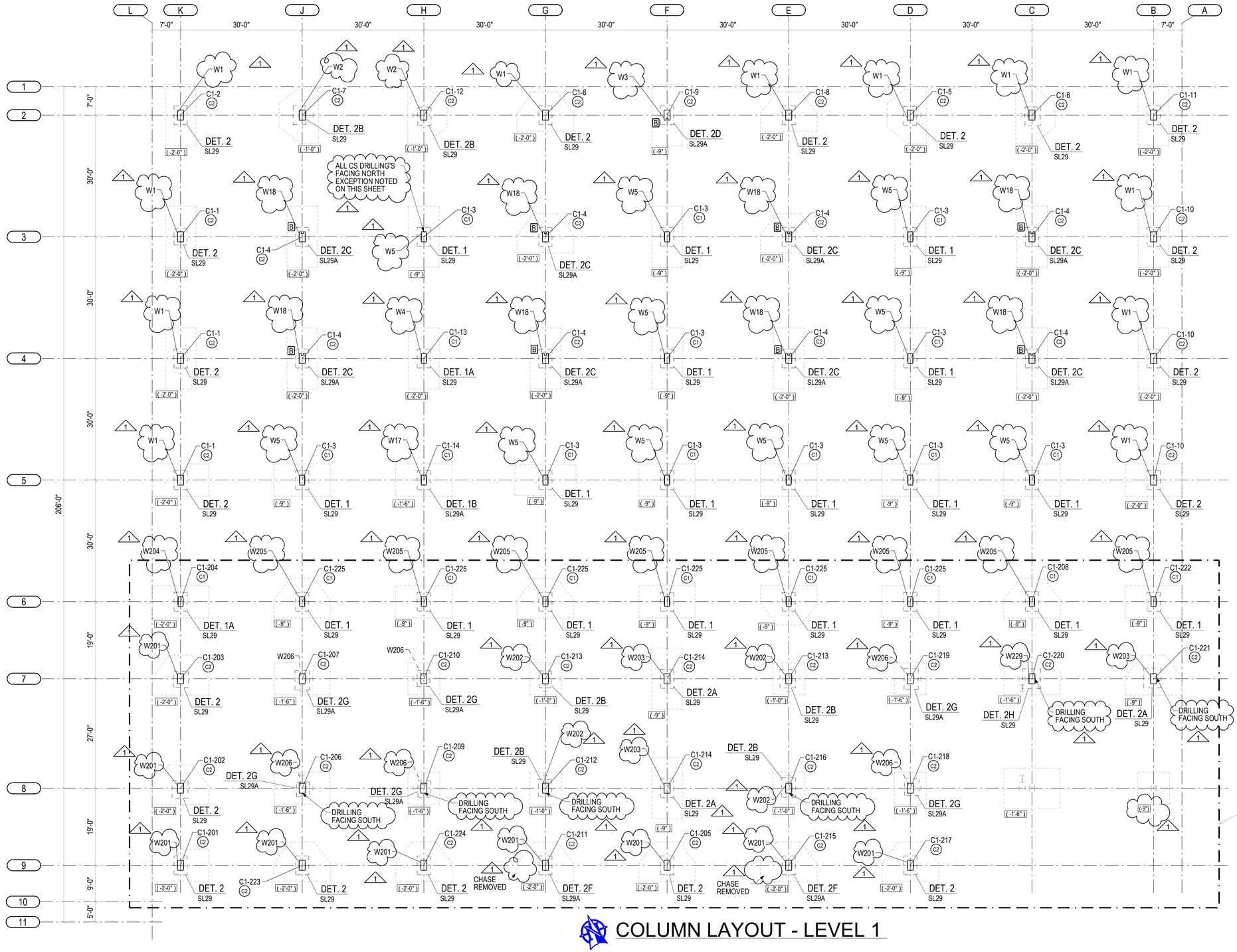

COLUMN LAYOUT - LEVEL 1

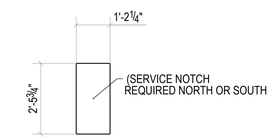

COLUMN TYPE C1

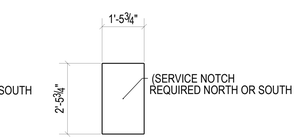

COLUMN TYPE C2

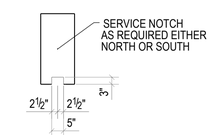

CHASE TYPE A

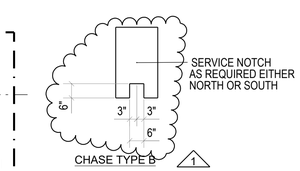

CHASE TYPE B

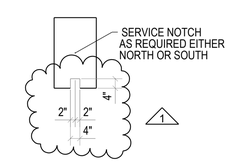

CHASE TYPE C

NOTES:

1. XX-X -DENOTES PILE CAP TOP ELEVATION
2. C1 -DENOTES COLUMN TYPE
3. A B C -DENOTES CHASE TYPE (ON EITHER NORTH OR SOUTH SIDE OF THE COLUMN)
4. ALL COLUMN CENTERED ON GRIDLINES UNO.

GLULAM SCHEDULE

MARK	WIDTH	DEPTH	DEPTH	LENGTH	LENGTH	TAPER CUTOFF	TAPER CUTOFF	CLASS	CLASS	SHIPPING WT.	SHIPPING WT.
W1	3-1/2"	21"x4	21"x4	18'-6 1/2"	N/A	20-0"-0"F	Architectural	24F-V4 DF/DF	Architectural	1,140	1,140
W2	3-1/2"	21"x4	21"x4	18'-6 1/2"	N/A	20-0"-0"F	Architectural	24F-V4 DF/DF	Architectural	1,140	1,140
W3	3-1/2"	21"x4	21"x4	18'-7 1/4"	N/A	20-0"-0"F	Architectural	24F-V4 DF/DF	Architectural	1,146	1,146
W4	3-1/2"	21"x4	21"x4	18'-7 1/4"	N/A	20-0"-0"F	Architectural	24F-V4 DF/DF	Architectural	1,146	1,146
W5	3-1/2"	21"x4	21"x4	19'-0"	N/A	20-0"-0"F	Architectural	24F-V4 DF/DF	Architectural	1,168	1,168
W17	3-1/2"	21"x4	21"x4	19'-0"	N/A	20-0"-0"F	Architectural	24F-V4 DF/DF	Architectural	1,168	1,168
W18	3-1/2"	21"x4	21"x4	19'-0"	N/A	20-0"-0"F	Architectural	24F-V4 DF/DF	Architectural	1,168	1,168
W201	3-1/2"	21"x4	21"x4	18'-6 1/2"	N/A	20-0"-0"F	Architectural	24F-V4 DF/DF	Architectural	1,140	1,140
W202	3-1/2"	21"x4	21"x4	18'-6 1/2"	N/A	20-0"-0"F	Architectural	24F-V4 DF/DF	Architectural	1,140	1,140
W203	3-1/2"	21"x4	21"x4	18'-7 1/4"	N/A	20-0"-0"F	Architectural	24F-V4 DF/DF	Architectural	1,146	1,146
W204	3-1/2"	21"x4	21"x4	18'-7 1/4"	N/A	20-0"-0"F	Architectural	24F-V4 DF/DF	Architectural	1,146	1,146
W205	3-1/2"	21"x4	21"x4	19'-0"	N/A	20-0"-0"F	Architectural	24F-V4 DF/DF	Architectural	1,168	1,168
W206	3-1/2"	21"x4	21"x4	19'-0"	N/A	20-0"-0"F	Architectural	24F-V4 DF/DF	Architectural	1,168	1,168
W229	3-1/2"	21"x4	21"x4	19'-0"	N/A	20-0"-0"F	Architectural	24F-V4 DF/DF	Architectural	1,168	1,168
C1-2	5-1/2"	21"x4	21"x4	18'-6 1/2"	N/A	GL460	Architectural	24F-V4 DF/DF	Architectural	1,140	1,140
C1-7	5-1/2"	21"x4	21"x4	18'-6 1/2"	N/A	GL460	Architectural	24F-V4 DF/DF	Architectural	1,140	1,140
C1-12	5-1/2"	21"x4	21"x4	18'-6 1/2"	N/A	GL460	Architectural	24F-V4 DF/DF	Architectural	1,140	1,140
C1-8	5-1/2"	21"x4	21"x4	18'-7 1/4"	N/A	GL460	Architectural	24F-V4 DF/DF	Architectural	1,146	1,146
C1-9	5-1/2"	21"x4	21"x4	18'-7 1/4"	N/A	GL460	Architectural	24F-V4 DF/DF	Architectural	1,146	1,146
C1-5	5-1/2"	21"x4	21"x4	19'-0"	N/A	GL460	Architectural	24F-V4 DF/DF	Architectural	1,168	1,168
C1-6	5-1/2"	21"x4	21"x4	19'-0"	N/A	GL460	Architectural	24F-V4 DF/DF	Architectural	1,168	1,168
C1-11	5-1/2"	21"x4	21"x4	19'-0"	N/A	GL460	Architectural	24F-V4 DF/DF	Architectural	1,168	1,168
C1-1	5-1/2"	21"x4	21"x4	18'-6 1/2"	N/A	GL460	Architectural	24F-V4 DF/DF	Architectural	1,140	1,140
C1-4	5-1/2"	21"x4	21"x4	18'-6 1/2"	N/A	GL460	Architectural	24F-V4 DF/DF	Architectural	1,140	1,140
C1-3	5-1/2"	21"x4	21"x4	18'-7 1/4"	N/A	GL460	Architectural	24F-V4 DF/DF	Architectural	1,146	1,146
C1-13	5-1/2"	21"x4	21"x4	18'-7 1/4"	N/A	GL460	Architectural	24F-V4 DF/DF	Architectural	1,146	1,146
C1-10	5-1/2"	21"x4	21"x4	19'-0"	N/A	GL460	Architectural	24F-V4 DF/DF	Architectural	1,168	1,168
C1-14	5-1/2"	21"x4	21"x4	19'-0"	N/A	GL460	Architectural	24F-V4 DF/DF	Architectural	1,168	1,168
C1-204	5-1/2"	21"x4	21"x4	18'-6 1/2"	N/A	GL460	Architectural	24F-V4 DF/DF	Architectural	1,140	1,140
C1-225	5-1/2"	21"x4	21"x4	18'-7 1/4"	N/A	GL460	Architectural	24F-V4 DF/DF	Architectural	1,146	1,146
C1-208	5-1/2"	21"x4	21"x4	19'-0"	N/A	GL460	Architectural	24F-V4 DF/DF	Architectural	1,168	1,168
C1-222	5-1/2"	21"x4	21"x4	19'-0"	N/A	GL460	Architectural	24F-V4 DF/DF	Architectural	1,168	1,168
C1-203	5-1/2"	21"x4	21"x4	18'-6 1/2"	N/A	GL460	Architectural	24F-V4 DF/DF	Architectural	1,140	1,140
C1-207	5-1/2"	21"x4	21"x4	18'-6 1/2"	N/A	GL460	Architectural	24F-V4 DF/DF	Architectural	1,140	1,140
C1-210	5-1/2"	21"x4	21"x4	18'-6 1/2"	N/A	GL460	Architectural	24F-V4 DF/DF	Architectural	1,140	1,140
C1-213	5-1/2"	21"x4	21"x4	18'-7 1/4"	N/A	GL460	Architectural	24F-V4 DF/DF	Architectural	1,146	1,146
C1-214	5-1/2"	21"x4	21"x4	18'-7 1/4"	N/A	GL460	Architectural	24F-V4 DF/DF	Architectural	1,146	1,146
C1-213	5-1/2"	21"x4	21"x4	18'-7 1/4"	N/A	GL460	Architectural	24F-V4 DF/DF	Architectural	1,146	1,146
C1-219	5-1/2"	21"x4	21"x4	19'-0"	N/A	GL460	Architectural	24F-V4 DF/DF	Architectural	1,168	1,168
C1-220	5-1/2"	21"x4	21"x4	19'-0"	N/A	GL460	Architectural	24F-V4 DF/DF	Architectural	1,168	1,168
C1-221	5-1/2"	21"x4	21"x4	19'-0"	N/A	GL460	Architectural	24F-V4 DF/DF	Architectural	1,168	1,168
C1-202	5-1/2"	21"x4	21"x4	18'-6 1/2"	N/A	GL460	Architectural	24F-V4 DF/DF	Architectural	1,140	1,140
C1-206	5-1/2"	21"x4	21"x4	18'-6 1/2"	N/A	GL460	Architectural	24F-V4 DF/DF	Architectural	1,140	1,140
C1-209	5-1/2"	21"x4	21"x4	18'-6 1/2"	N/A	GL460	Architectural	24F-V4 DF/DF	Architectural	1,140	1,140
C1-212	5-1/2"	21"x4	21"x4	18'-7 1/4"	N/A	GL460	Architectural	24F-V4 DF/DF	Architectural	1,146	1,146
C1-214	5-1/2"	21"x4	21"x4	18'-7 1/4"	N/A	GL460	Architectural	24F-V4 DF/DF	Architectural	1,146	1,146
C1-216	5-1/2"	21"x4	21"x4	18'-7 1/4"	N/A	GL460	Architectural	24F-V4 DF/DF	Architectural	1,146	1,146
C1-218	5-1/2"	21"x4	21"x4	19'-0"	N/A	GL460	Architectural	24F-V4 DF/DF	Architectural	1,168	1,168
C1-201	5-1/2"	21"x4	21"x4	18'-6 1/2"	N/A	GL460	Architectural	24F-V4 DF/DF	Architectural	1,140	1,140
C1-223	5-1/2"	21"x4	21"x4	18'-6 1/2"	N/A	GL460	Architectural	24F-V4 DF/DF	Architectural	1,140	1,140
C1-224	5-1/2"	21"x4	21"x4	18'-6 1/2"	N/A	GL460	Architectural	24F-V4 DF/DF	Architectural	1,140	1,140
C1-211	5-1/2"	21"x4	21"x4	18'-7 1/4"	N/A	GL460	Architectural	24F-V4 DF/DF	Architectural	1,146	1,146
C1-205	5-1/2"	21"x4	21"x4	18'-7 1/4"	N/A	GL460	Architectural	24F-V4 DF/DF	Architectural	1,146	1,146
C1-215	5-1/2"	21"x4	21"x4	18'-7 1/4"	N/A	GL460	Architectural	24F-V4 DF/DF	Architectural	1,146	1,146
C1-217	5-1/2"	21"x4	21"x4	19'-0"	N/A	GL460	Architectural	24F-V4 DF/DF	Architectural	1,168	1,168

REV	DATE	REMARKS
1	12/31/2020	SMTC IFF layout revisions
0	04/30/2020	IFF
L	03/04/2020	Area B OFA
K	02/05/2020	Area B OFA
J	01/17/2020	Area A OFA glulam
I	12/11/2019	Area A OFA
H	11/18/2019	Area B Geo.
G	11/15/2019	Area B Geo.

Ref Dwg: S100

ISSUED SMTC IFF layo

DATE: 12/31/2020

STRUCTURLAM
MASS TIMBER CORPORATION
Intelligence In Wood

DATE 18/Jul/2019	SHEET	REV.	PROJECT
BY CMI	SL3	1	BORREGAS
DWG TITLE LEVEL 1 PLAN			Job# 25991

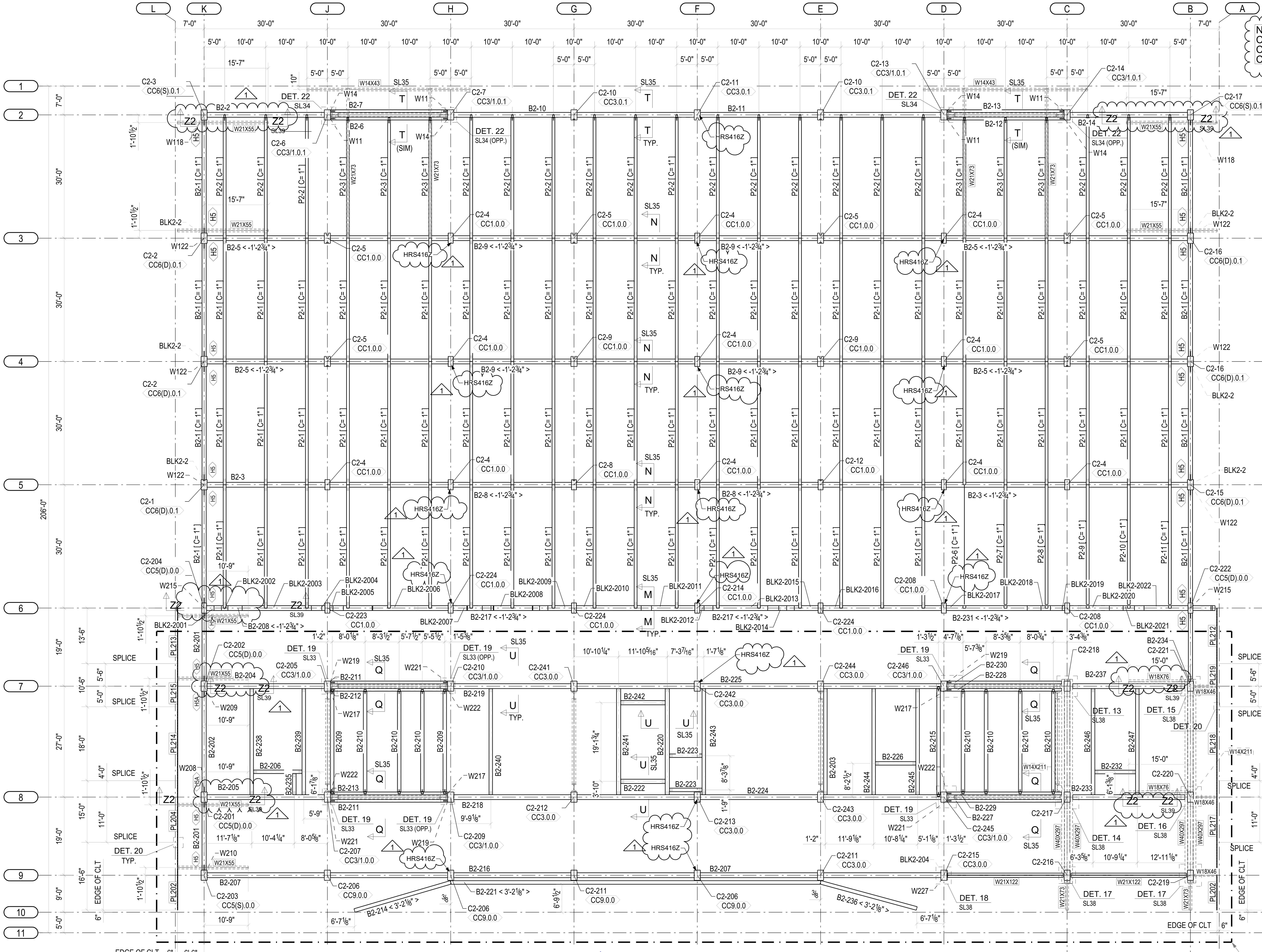

NOTES:
CC1,CC2,CC3,CC3(X),CC4,CC9, CCX SEE SL30 .
CC5(D), CC5(S), CC6(D) SEE SL31 .
CC7(D), CC7(S), CC8(S) SEE SL32 .

***WORK THIS SHEET WITH SL30 & SL31
SL33, SL34, SL35, SL36 & SL38

NOTES:

1. BX-X <±...> — BEAM MARK; DROP FROM U/S OF CLT ELEVATION

2. C -DENOTES CAMBER

3. GLULAM BEAMS ARE DROP BY ¾" BELOW U/S OF CLT, UNLESS OTHERWISE NOTED

4. CX-XX / CCX.X.X — COLUMN BOTTOM LEVEL; COLUMN MARK; COLUMN CONNECTION TYPE (SEE COLUMN CONNECTION TYPE LEGEND)

COLUMN CONNECTION TYPE LEGEND:

1. CCX.0.0
   - PERIMETER CONDITION: 0 = NO (TYPICAL), 1 = YES, SEE 2 / S401
   - FIRE RATING CONDITION: 0 = TYPICAL, 1 = EXTRA FIRE RATED
   - COLUMN CONNECTION TYPE NUMBER AS PER TYPICAL DETAILS

DETAIL 6/S401 REMOVED

IN ADDITION:

2. CCX(S).0.0
   PURLIN TO COLUMN CONNECTION (WHEN APPLICABLE):
   S = SINGLE PURLIN, 1 SIDE ONLY, N/S DIR
   D = DOUBLE PURLIN, 1 EACH SIDE OF COL, N/S DIR

OR

3. CCX/0.0.0
   ADJACENT SIDE CONNECTION (WHEN APPLICABLE):
   0 = NO ADJACENT END CONNECTION TYPE
   1 = ADJACENT END CONNECTION TYPE
   TYPICAL COLUMN CONNECTION TYPE (SINGLE SIDE ONLY)

GLULAM SCHEDULE

TYPE	PROD No.	QTY	WIDTH	DEPTH	LENGTH	CAMBER	STRESS GRADE	FINISH	STATUS	WEIGHT (LB)	TOTAL WEIGHT
B	B2-1	8	12 1/4"	28 1/4"	27'-6"	1"	24F-V4-DF/DF	Architectural	IFF RELEASED	2087	16693
B	B2-2	1	14 1/4"	32 3/4"	29'-11 3/16"	N/A	24F-V4-DF/DF	Architectural	IFF RELEASED	3090	3090
B	B2-3	2	14 1/4"	31 1/4"	59'-11 1/2"	N/A	24F-V8-DF/DF	Architectural	IFF RELEASED	5915	11829
B	B2-5	4	14 1/4"	31 1/4"	59'-11 1/2"	N/A	24F-V8-DF/DF	Architectural	IFF RELEASED	5912	23650
B	B2-6	1	8 1/4"	34 1/4"	28'-6"	N/A	24F-V4+2 FACE	Architectural	IFF RELEASED	1776	1776
B	B2-7	1	8 1/4"	34 1/4"	28'-6"	N/A	24F-V4+2 FACE	Architectural	IFF RELEASED	1779	1779
B	B2-8	2	14 1/4"	31 1/4"	59'-11 3/4"	N/A	24F-V8-DF/DF	Architectural	IFF RELEASED	5918	11836
B	B2-9	4	14 1/4"	31 1/4"	59'-11 3/4"	N/A	24F-V8-DF/DF	Architectural	IFF RELEASED	5915	23662
B	B2-10	1	14 1/4"	32 3/4"	59'-11 1/2"	N/A	24F-V8-DF/DF	Architectural	IFF RELEASED	6188	6188
B	B2-11	1	14 1/4"	32 3/4"	59'-11 1/2"	N/A	24F-V8-DF/DF	Architectural	IFF RELEASED	6188	6188
B	B2-12	1	8 1/4"	34 1/4"	28'-6"	N/A	24F-V4+2 FACE	Architectural	IFF RELEASED	1776	1776
B	B2-13	1	8 1/4"	34 1/4"	28'-6"	N/A	24F-V4+2 FACE	Architectural	IFF RELEASED	1779	1779
B	B2-14	1	14 1/4"	32 3/4"	29'-11 3/16"	N/A	24F-V4-DF/DF	Architectural	IFF RELEASED	3090	3090
B	B2-201	2	12 1/4"	28 1/4"	16'-6"	N/A	24F-V4-DF/DF	Architectural	IFF RELEASED	1240	2480
B	B2-202	1	12 1/4"	28 1/4"	24'-6"	N/A	24F-V4-DF/DF	Architectural	IFF RELEASED	1854	1854
B	B2-203	1	10 1/4"	25 1/4"	25'-9 9/16"	N/A	24F-V4-DF/DF	Architectural	IFF RELEASED	1479	1479
B	B2-204	1	14 1/4"	31 1/4"	29'-11 3/16"	N/A	24F-V4-DF/DF	Architectural	IFF RELEASED	2952	2952
B	B2-205	1	14 1/4"	31 1/4"	29'-11 3/16"	N/A	24F-V4-DF/DF	Architectural	IFF RELEASED	2952	2952
B	B2-206	1	10 1/4"	25 1/4"	11'-9 1/2"	N/A	24F-V4-DF/DF	Architectural	IFF RELEASED	675	675
B	B2-207	2	14 1/4"	32 3/4"	59'-11 1/2"	N/A	24F-V8-DF/DF	Architectural	IFF RELEASED	6194	12388
B	B2-208	1	14 1/4"	31 1/4"	59'-11 1/2"	N/A	24F-V8-DF/DF	Architectural	IFF RELEASED	5916	5916
B	B2-209	2	10 1/4"	25 1/4"	24'-6"	N/A	24F-V4-DF/DF	Architectural	IFF RELEASED	1396	2792
B	B2-210	7	10 1/4"	25 1/4"	24'-6"	N/A	24F-V4-DF/DF	Architectural	IFF RELEASED	1396	9773
B	B2-211	2	8 1/4"	31 1/4"	28'-6"	N/A	24F-V4+2 FACE	Architectural	IFF RELEASED	1624	3247
B	B2-212	1	8 1/4"	35 3/4"	28'-6"	N/A	24F-V4+2 FACE	Architectural	IFF RELEASED	1853	1853
B	B2-213	1	8 1/4"	35 3/4"	28'-6"	N/A	24F-V4+2 FACE	Architectural	IFF RELEASED	1853	1853
B	B2-214	1	10 1/2"	25"	24'-4 9/16"	N/A	24F-V4-DF/DF	Architectural		1424	1424
B	B2-215	1	10 1/4"	25 1/4"	25'-9 1/2"	N/A	24F-V4-DF/DF	Architectural	IFF RELEASED	1470	1470
B	B2-216	1	14 1/4"	32 3/4"	59'-11 3/4"	N/A	24F-V8-DF/DF	Architectural	IFF RELEASED	6196	6196
B	B2-217	2	14 1/4"	31 1/4"	59'-11 3/4"	N/A	24F-V8-DF/DF	Architectural	IFF RELEASED	5918	11836
B	B2-218	1	14 1/4"	31 1/4"	59'-11 1/2"	N/A	24F-V8-DF/DF	Architectural	IFF RELEASED	5911	5911
B	B2-219	1	14 1/4"	31 1/4"	59'-11 1/2"	N/A	24F-V8-DF/DF	Architectural	IFF RELEASED	5911	5911
B	B2-220	1	12 1/4"	25 1/4"	25'-9 9/16"	N/A	24F-V4-DF/DF	Architectural	IFF RELEASED	1770	1770
B	B2-221	1	10 1/2"	25"	90'-0"	N/A	24F-V8-DF/DF	Architectural		5256	5256
B	B2-222	1	12 1/4"	25 1/4"	10'-9 7/8"	N/A	24F-V4-DF/DF	Architectural	IFF RELEASED	742	742
B	B2-223	2	10 1/4"	25 1/4"	7'-11 1/8"	N/A	24F-V4-DF/DF	Architectural	IFF RELEASED	453	906
B	B2-224	1	14 1/4"	31 1/4"	59'-11 1/2"	N/A	24F-V8-DF/DF	Architectural	IFF RELEASED	5910	5910
B	B2-225	1	14 1/4"	31 1/4"	59'-11 1/2"	N/A	24F-V8-DF/DF	Architectural	IFF RELEASED	5910	5910
B	B2-226	1	10 1/4"	25 1/4"	9'-9 7/8"	N/A	24F-V4-DF/DF	Architectural	IFF RELEASED	562	562
B	B2-227	1	8 1/4"	31 1/4"	27'-10 5/8"	N/A	24F-V4+2 FACE	Architectural	IFF RELEASED	1587	1587
B	B2-228	1	8 1/4"	35 3/4"	27'-10 5/8"	N/A	24F-V4+2 FACE	Architectural	IFF RELEASED	1812	1812
B	B2-229	1	8 1/4"	35 3/4"	27'-10 5/8"	N/A	24F-V4+2 FACE	Architectural	IFF RELEASED	1812	1812
B	B2-230	1	8 1/4"	31 1/4"	27'-10 5/8"	N/A	24F-V4+2 FACE	Architectural	IFF RELEASED	1587	1587
B	B2-231	1	14 1/4"	31 1/4"	65'-11 7/8"	N/A	24F-V8-DF/DF	Architectural	IFF RELEASED	6508	6508
B	B2-232	1	10 1/4"	25 1/4"	9'-10 7/8"	N/A	24F-V4-DF/DF	Architectural	IFF RELEASED	567	567
B	B2-233	1	14 1/4"	31 1/4"	27'-3 1/4"	N/A	24F-V4-DF/DF	Architectural	IFF RELEASED	2676	2676
B	B2-234	1	12 1/4"	28 1/4"	16'-0 1/2"	N/A	24F-V4-DF/DF	Architectural	IFF RELEASED	1211	1211
B	B2-235	1	10 1/4"	25 1/4"	5'-1 1/2"	N/A	24F-V4-DF/DF	Architectural	IFF RELEASED	292	292
B	B2-236	1	10 1/2"	25"	24'-2 15/16"	N/A	24F-V4-DF/DF	Architectural		1416	1416
B	B2-237	1	14 1/4"	31 1/4"	27'-3 1/4"	N/A	24F-V4-DF/DF	Architectural	IFF RELEASED	2676	2676
B	B2-238	1	10 1/4"	25 1/4"	25'-9 9/16"	N/A	24F-V4-DF/DF	Architectural	IFF RELEASED	1479	1479
B	B2-239	1	10 1/4"	25 1/4"	25'-9 9/16"	N/A	24F-V4-DF/DF	Architectural	IFF RELEASED	1479	1479
B	B2-240	1	10 1/4"	25 1/4"	25'-9 9/16"	N/A	24F-V4-DF/DF	Architectural	IFF RELEASED	1479	1479
B	B2-241	1	12 1/4"	25 1/4"	25'-9 9/16"	N/A	24F-V4-DF/DF	Architectural	IFF RELEASED	1770	1770
B	B2-242	1	12 1/4"	25 1/4"	10'-9 7/8"	N/A	24F-V4-DF/DF	Architectural	IFF RELEASED	742	742
B	B2-243	1	10 1/4"	25 1/4"	25'-9 9/16"	N/A	24F-V4-DF/DF	Architectural	IFF RELEASED	1479	1479
B	B2-244	1	10 1/4"	25 1/4"	25'-9 9/16"	N/A	24F-V4-DF/DF	Architectural	IFF RELEASED	1479	1479
B	B2-245	1	10 1/4"	25 1/4"	25'-9 9/16"	N/A	24F-V4-DF/DF	Architectural	IFF RELEASED	1479	1479
B	B2-246	1	10 1/4"	25 1/4"	25'-9 9/16"	N/A	24F-V4-DF/DF	Architectural	IFF RELEASED	1479	1479
B	B2-247	1	10 1/4"	25 1/4"	25'-9 9/16"	N/A	24F-V4-DF/DF	Architectural	IFF RELEASED	1479	1479
B	BLK2-2	6	8 1/2"	13 1/4"	1'-4 9/16"	N/A	L2D-DF/DF	Architectural	IFF RELEASED	35	208
B	BLK2-204	1	8 1/2"	13 1/4"	1'-1 1/16"	N/A	L2D-DF/DF	Architectural	IFF RELEASED	27	27
B	BLK2-2001	1	14 1/4"	14"	2'-4 7/16"	N/A	24F-V4-DF/DF	Architectural	IFF RELEASED	104	104
B	BLK2-2002	1	14 1/4"	14"	1'-6 7/8"	N/A	24F-V4-DF/DF	Architectural	IFF RELEASED	53	53
B	BLK2-2003	1	14 1/4"	14"	16'-10 1/16"	N/A	24F-V4-DF/DF	Architectural	IFF RELEASED	714	714
B	BLK2-2004	1	14 1/4"	14"	0'-9 3/16"	N/A	24F-V4-DF/DF	Architectural	IFF RELEASED	34	34
B	BLK2-2005	1	14 1/4"	14"	0'-9 1/8"	N/A	24F-V4-DF/DF	Architectural	IFF RELEASED	34	34
B	BLK2-2006	1	14 1/4"	14"	25'-6 1/8"	N/A	24F-V4-DF/DF	Architectural	IFF RELEASED	1064	1064
B	BLK2-2007	1	14 1/4"	14"	7'-1 1/8"	N/A	24F-V4-DF/DF	Architectural	IFF RELEASED	298	298
B	BLK2-2008	1	14 1/4"	14"	11'-9 11/16"	N/A	24F-V4-DF/DF	Architectural	IFF RELEASED	507	507
B	BLK2-2009	1	14 1/4"	14"	5'-8 7/8"	N/A	24F-V4-DF/DF	Architectural	IFF RELEASED	238	238
B	BLK2-2010	1	14 1/4"	14"	15'-8 7/8"	N/A	24F-V4-DF/DF	Architectural	IFF RELEASED	665	665
B	BLK2-2011	1	14 1/4"	14"	10'-6 5/8"	N/A	24F-V4-DF/DF	Architectural	IFF RELEASED	452	452
B	BLK2-2012	1	14 1/4"	14"	1'-0 3/8"	N/A	24F-V4-DF/DF	Architectural	IFF RELEASED	46	46
B	BLK2-2013	1	14 1/4"	14"	13'-3 7/8"	N/A	24F-V4-DF/DF	Architectural	IFF RELEASED	558	558
B	BLK2-2014	1	14 1/4"	14"	1'-11"	N/A	24F-V4-DF/DF	Architectural	IFF RELEASED	85	85
B	BLK2-2015	1	14 1/4"	14"	5'-9 5/16"	N/A	24F-V4-DF/DF	Architectural	IFF RELEASED	240	240
B	BLK2-2016	1	14 1/4"	14"	28'-9 1/2"	N/A	24F-V4-DF/DF	Architectural	IFF RELEASED	1215	1215
B	BLK2-2017	1	14 1/4"	14"	19'-8 1/4"	N/A	24F-V4-DF/DF	Architectural	IFF RELEASED	841	841
B	BLK2-2018	1	14 1/4"	14"	2'-3 7/16"	N/A	24F-V4-DF/DF	Architectural	IFF RELEASED	85	85
B	BLK2-2019	1	14 1/4"	14"	0'-6 7/8"	N/A	24F-V4-DF/DF	Architectural	IFF RELEASED	26	26
B	BLK2-2020	1	14 1/4"	14"	9'-8 1/8"	N/A	24F-V4-DF/DF	Architectural	IFF RELEASED	406	406
B	BLK2-2021	1	14 1/4"	14"	2'-9"	N/A	24F-V4-DF/DF	Architectural	IFF RELEASED	106	106
B	BLK2-2022	1	14 1/4"	14"	17'-3 7/16"	N/A	24F-V4-DF/DF	Architectural	IFF RELEASED	740	740
C	C2-1	1	17 3/4"	29 3/4"	30'-11 1/4"	N/A	L2D-DF/DF	Architectural	IFF RELEASED	3326	3326
C	C2-2	2	17 3/4"	29 3/4"	30'-11 1/4"	N/A	L2D-DF/DF	Architectural	IFF RELEASED	3429	6858
C	C2-3	1	17 3/4"	29 3/4"	30'-11 1/4"	N/A	L2D-DF/DF	Architectural	IFF RELEASED	3422	3422
C	C2-4	11	14 1/4"	29 3/4"	32'-4 1/8"	N/A	L2D-DF/DF	Architectural	IFF RELEASED	2816	30972
C	C2-5	6	17 3/4"	29 3/4"	32'-4 1/8"	N/A	L2D-DF/DF	Architectural	IFF RELEASED	3157	18940
C	C2-6	1	17 3/4"	29 3/4"	31'-1 3/4"	N/A	L2D-DF/DF	Architectural	IFF RELEASED	3433	3433
C	C2-7	1	17 3/4"	29 3/4"	31'-1 3/4"	N/A	L2D-DF/DF	Architectural	IFF RELEASED	3433	3433
C	C2-8	1	14 1/4"	29 3/4"	32'-4 1/8"	N/A	L2D-DF/DF	Architectural	IFF RELEASED	2711	2711
C	C2-9	2	17 3/4"	29 3/4"	32'-4 1/8"	N/A	L2D-DF/DF	Architectural	IFF RELEASED	3260	6520
C	C2-10	2	17 3/4"	29 3/4"	31'-1 3/4"	N/A	L2D-DF/DF	Architectural	IFF RELEASED	3277	6554
C	C2-11	1	17 3/4"	29 3/4"	31'-1 3/4"	N/A	L2D-DF/DF	Architectural	IFF RELEASED	3137	3137
C	C2-12	1	14 1/4"	29 3/4"	32'-4 1/8"	N/A	L2D-DF/DF	Architectural	IFF RELEASED	2711	2711
C	C2-13	1	17 3/4"	29 3/4"	31'-1 3/4"	N/A	L2D-DF/DF	Architectural	IFF RELEASED	3433	3433
C	C2-14	1	17 3/4"	29 3/4"	31'-1 3/4"	N/A	L2D-DF/DF	Architectural	IFF RELEASED	3433	3433
C	C2-15	1	17 3/4"	29 3/4"	30'-11 1/4"	N/A	L2D-DF/DF	Architectural	IFF RELEASED	3326	3326
C	C2-16	2	17 3/4"	29 3/4"	30'-11 1/4"	N/A	L2D-DF/DF	Architectural	IFF RELEASED	3429	6858
C	C2-17	1	17 3/4"	29 3/4"	30'-11 1/4"	N/A	L2D-DF/DF	Architectural	IFF RELEASED	3422	3422
C	C2-201	1	17 3/4"	29 3/4"	15'-6"	N/A	Comb3	Architectural	IFF RELEASED	1659	1659
C	C2-202	1	17 3/4"	29 3/4"	15'-6"	N/A	Comb3	Architectural	IFF RELEASED	1659	1659
C	C2-203	1	17 3/4"	29 3/4"	15'-6"	N/A	Comb3	Architectural	IFF RELEASED	1654	1654
C	C2-204	1	14 1/4"	29 3/4"	15'-6"	N/A	Comb3	Architectural	IFF RELEASED	1332	1332
C	C2-205	1	17 3/4"	29 3/4"	16'-7 3/8"	N/A	Comb2	Architectural	IFF RELEASED	1731	1731
C	C2-206	3	17 3/4"	29 3/4"	16'-6 15/16"	N/A	Comb3	Architectural	IFF RELEASED	1670	5011
C	C2-207	1	17 3/4"	29 3/4"	16'-7 3/8"	N/A	Comb2	Architectural	IFF RELEASED	1731	1731
C	C2-208	2	14 1/4"	29 3/4"	17'-9 3/8"	N/A	Comb2	Architectural	IFF RELEASED	1446	2891
C	C2-209	1	17 3/4"	29 3/4"	16'-7 3/8"	N/A	Comb2	Architectural	IFF RELEASED	1731	1731
C	C2-210	1	17 3/4"	29 3/4"	16'-7 3/8"	N/A	Comb2	Architectural	IFF RELEASED	1731	1731
C	C2-211	2	17 3/4"	29 3/4"	16'-7"	N/A	Comb3	Architectural	IFF RELEASED	1670	3341
C	C2-212	1	17 3/4"	29 3/4"	16'-7"	N/A	Comb2	Architectural	IFF RELEASED	1677	1677
C	C2-213	1	17 3/4"	29 3/4"	16'-7"	N/A	Comb2	Architectural	IFF RELEASED	1677	1677
C	C2-214	1	14 1/4"	29 3/4"	63'-1 1/2"	N/A	Comb3	Architectural	IFF RELEASED	5777	5777
C	C2-215	1	17 3/4"	29 3/4"	15'-5"	N/A	Comb3	Architectural	IFF RELEASED	1602	1602
C	C2-216	1	17 3/4"	29 3/4"	13'-8 5/16"	N/A	Comb3	Architectural	IFF RELEASED	1401	1401
C	C2-217	1	17 3/4"	29 3/4"	13'-8 5/16"	N/A	Comb2	Architectural	IFF RELEASED	1464	1464
C	C2-218	1	17 3/4"	29 3/4"	13'-8 5/16"	N/A	Comb2	Architectural	IFF RELEASED	1463	1463
C	C2-219	1	17 3/4"	29 3/4"	12'-9 3/4"	N/A	Comb3	Architectural	IFF RELEASED	1338	1338
C	C2-220	1	17 3/4"	29 3/4"	12'-9 3/4"	N/A	Comb3	Architectural	IFF RELEASED	1343	1343
C	C2-221	1	17 3/4"	29 3/4"	12'-9 3/4"	N/A	Comb3	Architectural	IFF RELEASED	1343	1343
C	C2-222	1	14 1/4"	29 3/4"	15'-6"	N/A	Comb3	Architectural	IFF RELEASED	1332	1332
C	C2-223	1	14 1/4"	29 3/4"	17'-9 3/8"	N/A	Comb2	Architectural	IFF RELEASED	1446	1446
C	C2-224	3	14 1/4"	29 3/4"	17'-9 3/8"	N/A	Comb2	Architectural	IFF RELEASED	1446	4337
C	C2-241	1	17 3/4"	29 3/4"	16'-7"	N/A	Comb2	Architectural	IFF RELEASED	1677	1677
C	C2-242	1	17 3/4"	29 3/4"	16'-7"	N/A	Comb2	Architectural	IFF RELEASED	1677	1677
C	C2-243	1	17 3/4"	29 3/4"	16'-7"	N/A	Comb2	Architectural	IFF RELEASED	1677	1677
C	C2-244	1	17 3/4"	29 3/4"	16'-7"	N/A	Comb2	Architectural	IFF RELEASED	1677	1677
C	C2-245	1	17 3/4"	29 3/4"	16'-7 3/8"	N/A	Comb2	Architectural	IFF RELEASED	1731	1731
C	C2-246	1	17 3/4"	29 3/4"	16'-7 3/8"	N/A	Comb2	Architectural	IFF RELEASED	1732	1732
P	P2-1	66	8 1/4"	23 3/4"	29'-11 3/4"	1"	24F-V4-DF/DF	Architectural	IFF RELEASED	1286	84877
P	P2-2	18	8 1/4"	23 3/4"	29'-4 5/8"	1"	24F-V4-DF/DF	Architectural	IFF RELEASED	1267	22805
P	P2-3	6	8 1/4"	23 3/4"	28'-8 7/8"	1"	24F-V4-DF/DF	Architectural	IFF RELEASED	1239	7433
P	P2-6	1	0	0	0'	1"	24F-V4-DF/DF	Architectural	IFF RELEASED	1270	1270
P	P2-7	1	0	0	0'	1"	24F-V4-DF/DF	Architectural	IFF RELEASED	1270	1270
P	P2-8	1	0	0	0'	1"	24F-V4-DF/DF	Architectural	IFF RELEASED	1270	1270
P	P2-9	1	0	0	0'	1"	24F-V4-DF/DF	Architectural	IFF RELEASED	1270	1270
P	P2-10	1	0	0	0'	1"	24F-V4-DF/DF	Architectural	IFF RELEASED	1270	1270
P	P2-11	1	0	0	0'	1"	24F-V4-DF/DF	Architectural	IFF RELEASED	1270	1270

LEVEL 2 FRAMING PLAN

U/S OF CLT = EL. + 16'-9 7/8" (U.N.O.)

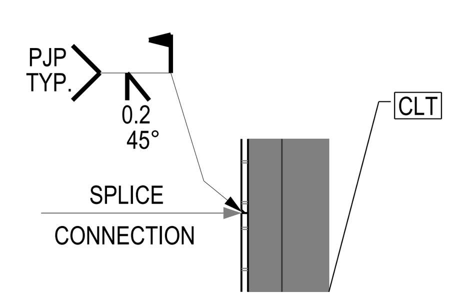

DETAIL 20

TYPICAL SIDE PLATE FIELD WELDING DETAIL

REV	DATE	REMARKS
1	12/31/2020	SMTC IFF layout revisions
0	04/30/2020	IFF
L	03/04/2020	Area B OFA
K	02/05/2020	Area B OFA
J	01/17/2020	Area A OFA glulam
I	12/11/2019	Area A OFA
H	11/18/2019	Area B Geo.
G	11/15/2019	Area B Geo.

Ref Dwg: S101

ISSUED SMTC IFF layo

DATE: 12/31/2020

STRUCTURLAM
MASS TIMBER CORPORATION
Intelligence In Wood

DATE 18/Jul/2019

BY CMI

DWG TITLE LEVEL 2 FRAMING PLAN

SHEET SL4

REV. 1

PROJECT BORREGAS

Job# 25991

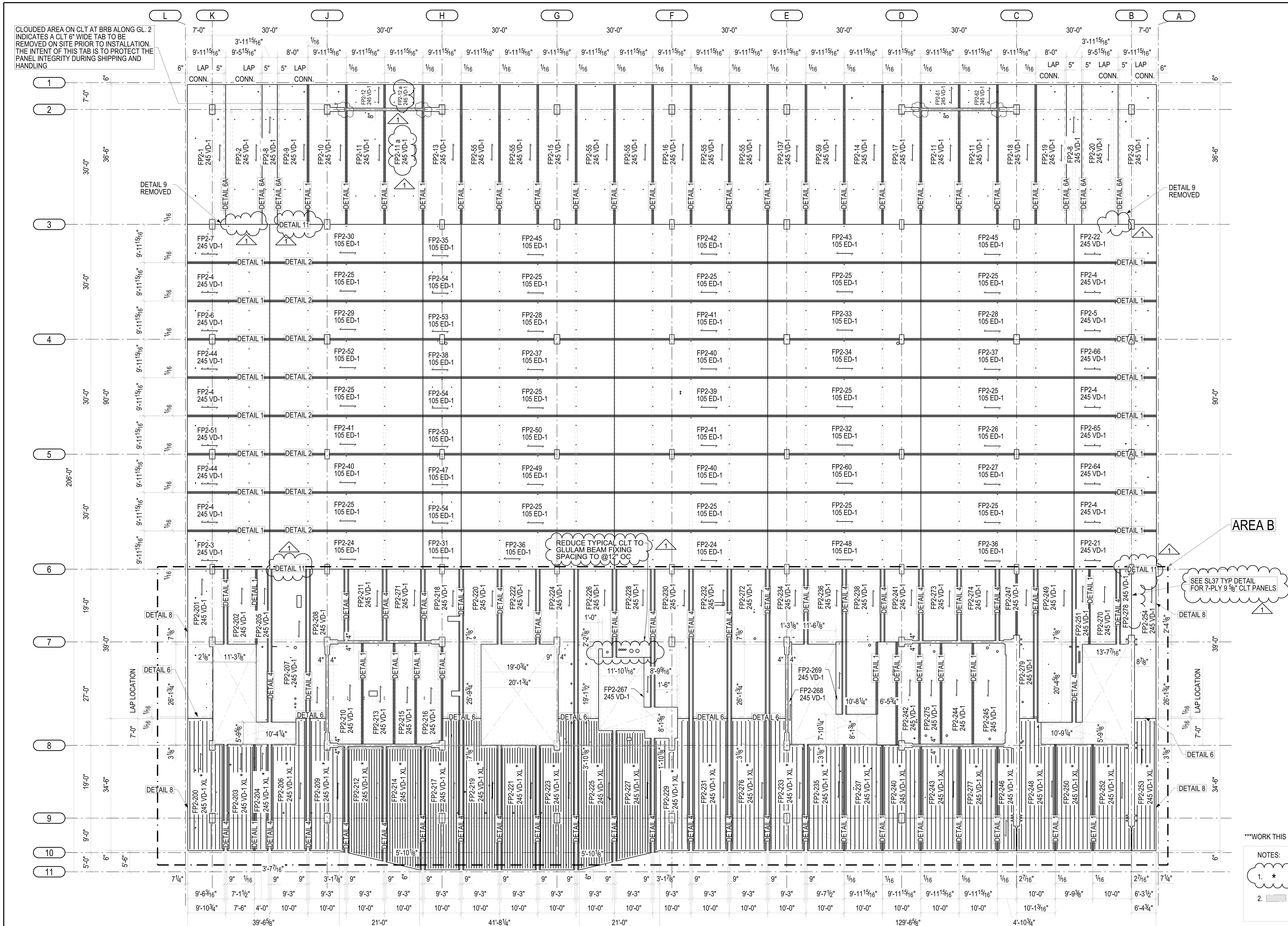

SEE SL41 FOR CLT PANEL SCHEDULE

CLT SCHEDULE

TYPE	NAME	QTY	THICKNESS	WIDTH	LENGTH	WEIGHT(LB)	TOTAL WEIGHT
245 VD-1 XL	FP2-200	1	9 5/8"	9'-6 3/16"	34'-11 1/16"	7753	7753
245 VD-1 XL	FP2-203	1	9 5/8"	7'-1 1/2"	27'-9 1/8"	5034	5034
245 VD-1 XL	FP2-204	1	9 5/8"	3'-7 7/16"	27'-9 1/8"	2542	2542
245 VD-1 XL	FP2-206	1	9 5/8"	9'-3"	34'-11 1/16"	7040	7040
245 VD-1 XL	FP2-209	1	9 5/8"	9'-3"	35'-3 1/4"	7067	7067
245 VD-1 XL	FP2-212	1	9 5/8"	9'-3"	29'-10 3/4"	6790	6790
245 VD-1 XL	FP2-214	1	9 5/8"	9'-3"	32'-2"	7351	7351
245 VD-1 XL	FP2-217	1	9 5/8"	9'-3"	39'-11 1/16"	8290	8290
245 VD-1 XL	FP2-219	1	9 5/8"	9'-3"	39'-11 1/16"	8541	8541
245 VD-1 XL	FP2-221	1	9 5/8"	9'-3"	32'-6"	7661	7661
245 VD-1 XL	FP2-223	1	9 5/8"	9'-3"	39'-11 1/16"	8273	8273
245 VD-1 XL	FP2-225	1	9 5/8"	9'-3"	39'-11 1/16"	8798	8798
245 VD-1 XL	FP2-227	1	9 5/8"	9'-3"	34'-0 7/8"	7666	7666
245 VD-1 XL	FP2-229	1	9 5/8"	9'-3"	35'-3 1/4"	7142	7142
245 VD-1 XL	FP2-231	1	9 5/8"	9'-3"	34'-11 1/16"	8196	8196
245 VD-1 XL	FP2-233	1	9 5/8"	9'-3"	34'-11 1/16"	7134	7134
245 VD-1 XL	FP2-235	1	9 5/8"	9'-7 1/2"	27'-9 1/8"	6819	6819
245 VD-1 XL	FP2-237	1	9 5/8"	9'-11 15/16"	27'-9 1/8"	7080	7080
245 VD-1 XL	FP2-240	1	9 5/8"	9'-11 15/16"	27'-7 1/8"	6836	6836
245 VD-1 XL	FP2-243	1	9 5/8"	9'-11 15/16"	27'-2"	6934	6934
245 VD-1 XL	FP2-246	1	9 5/8"	4'-10 3/4"	27'-2"	3001	3001
245 VD-1 XL	FP2-248	1	9 5/8"	10'-0"	34'-10 15/16	7677	7677
245 VD-1 XL	FP2-250	1	9 5/8"	9'-9 3/8"	27'-9 1/8"	6939	6939
245 VD-1 XL	FP2-252	1	9 5/8"	10'-0"	27'-9 1/8"	6718	6718
245 VD-1 XL	FP2-253	1	9 5/8"	6'-3 1/2"	34'-11 1/16"	5094	5094
245 VD-1 XL	FP2-276	1	9 5/8"	9'-3"	34'-11 1/16"	8196	8196
245 VD-1 XL	FP2-277	1	9 5/8"	9'-11 15/16"	27'-2"	6937	6937
245 VD-1	FP2-1	1	9 5/8"	10'-0"	36'-5 15/16"	9040	9040
245 VD-1	FP2-2	1	9 5/8"	9'-11"	36'-5 15/16"	8909	8909
245 VD-1	FP2-3	1	9 5/8"	9'-11 15/16"	21'-5 15/16"	5473	5473
245 VD-1	FP2-4	6	9 5/8"	9'-11 15/16"	21'-5 15/16"	5499	32995
245 VD-1	FP2-5	1	9 5/8"	9'-11 15/16"	21'-5 15/16"	5451	5451
245 VD-1	FP2-6	1	9 5/8"	9'-11 15/16"	21'-5 15/16"	5451	5451
245 VD-1	FP2-7	1	9 5/8"	9'-11 15/16"	21'-5 15/16"	5463	5463
245 VD-1	FP2-8	2	9 5/8"	4'-10"	36'-5 15/16"	4140	8281
245 VD-1	FP2-9	1	9 5/8"	8'-0"	36'-5 15/16"	7288	7288
245 VD-1	FP2-10	1	9 5/8"	9'-11 15/16"	36'-5 15/16"	9088	9088
245 VD-1	FP2-11	4	9 5/8"	9'-11 15/16"	29'-7 15/16"	7588	30353
245 VD-1	FP2-12	2	9 5/8"	9'-11 15/16"	6'-2"	1577	3155
245 VD-1	FP2-13	1	9 5/8"	9'-11 15/16"	36'-5 15/16"	9099	9099
245 VD-1	FP2-14	1	9 5/8"	9'-11 15/16"	36'-5 15/16"	9335	9335
245 VD-1	FP2-15	1	9 5/8"	9'-11 15/16"	36'-5 15/16"	9192	9192
245 VD-1	FP2-16	1	9 5/8"	9'-11 15/16"	36'-5 15/16"	9201	9201
245 VD-1	FP2-17	1	9 5/8"	9'-11 15/16"	36'-5 15/16"	9098	9098
245 VD-1	FP2-18	1	9 5/8"	9'-11 15/16"	36'-5 15/16"	9089	9089
245 VD-1	FP2-19	1	9 5/8"	8'-0"	36'-5 15/16"	7287	7287
245 VD-1	FP2-20	1	9 5/8"	9'-11"	36'-5 15/16"	8911	8911
245 VD-1	FP2-21	1	9 5/8"	9'-11 15/16"	21'-5 15/16"	5474	5474
245 VD-1	FP2-22	1	9 5/8"	9'-11 15/16"	21'-5 15/16"	5463	5463
245 VD-1	FP2-23	1	9 5/8"	10'-0"	36'-5 15/16"	9040	9040
245 VD-1	FP2-44	2	9 5/8"	9'-11 15/16"	21'-5 15/16"	5451	10902
245 VD-1	FP2-51	1	9 5/8"	9'-11 15/16"	21'-5 15/16"	5450	5450
245 VD-1	FP2-55	6	9 5/8"	9'-11 15/16"	36'-5 15/16"	9336	56019
245 VD-1	FP2-59	1	9 5/8"	9'-11 15/16"	36'-5 15/16"	9336	9336
245 VD-1	FP2-61	1	9 5/8"	9'-11 15/16"	6'-2"	1577	1577
245 VD-1	FP2-62	1	9 5/8"	9'-11 15/16"	6'-2"	1577	1577
245 VD-1	FP2-64	1	9 5/8"	9'-11 15/16"	21'-5 15/16"	5451	5451
245 VD-1	FP2-65	1	9 5/8"	9'-11 15/16"	21'-5 15/16"	5450	5450
245 VD-1	FP2-66	1	9 5/8"	9'-11 15/16"	21'-5 15/16"	5451	5451
245 VD-1	FP2-137	1	9 5/8"	9'-11 15/16"	36'-5 15/16"	9191	9191
245 VD-1	FP2-201	1	9 5/8"	9'-6 3/16"	38'-11 7/8"	7893	7893
245 VD-1	FP2-202	1	9 5/8"	7'-7 7/16"	19'-7 1/16"	3814	3814
245 VD-1	FP2-205	1	9 5/8"	3'-1 9/16"	39'-11 3/16"	3174	3174
245 VD-1	FP2-207	1	9 5/8"	9'-3"	39'-11 3/16"	9240	9240
245 VD-1	FP2-208	1	9 5/8"	9'-3"	38'-11 7/8"	6502	6502
245 VD-1	FP2-210	1	9 5/8"	8'-10 1/8"	26'-4"	5897	5897
245 VD-1	FP2-211	1	9 5/8"	9'-3"	18'-7 15/16"	4415	4415
245 VD-1	FP2-213	1	9 5/8"	8'-3 7/16"	26'-4"	5503	5503
245 VD-1	FP2-215	1	9 5/8"	5'-7 7/16"	26'-4"	3774	3774
245 VD-1	FP2-216	1	9 5/8"	6'-10 13/16"	26'-4"	4581	4581
245 VD-1	FP2-218	1	9 5/8"	9'-3"	38'-11 7/8"	6481	6481
245 VD-1	FP2-220	1	9 5/8"	9'-3"	38'-11 7/8"	6991	6991
245 VD-1	FP2-222	1	9 5/8"	9'-3"	19'-7 1/16"	4634	4634
245 VD-1	FP2-224	1	9 5/8"	9'-3"	38'-11 7/8"	6598	6598
245 VD-1	FP2-226	1	9 5/8"	9'-3"	38'-11 7/8"	7589	7589
245 VD-1	FP2-228	1	9 5/8"	9'-3"	23'-0 3/16"	5397	5397
245 VD-1	FP2-230	1	9 5/8"	9'-3"	38'-11 7/8"	8599	8599
245 VD-1	FP2-232	1	9 5/8"	9'-3"	38'-11 7/8"	9121	9121
245 VD-1	FP2-234	1	9 5/8"	9'-3"	38'-11 7/8"	6597	6597
245 VD-1	FP2-236	1	9 5/8"	9'-3"	19'-7 1/16"	4606	4606
245 VD-1	FP2-238	1	9 5/8"	9'-3"	37'-10 9/16"	8415	8415
245 VD-1	FP2-239	1	9 5/8"	5'-2 3/16"	26'-10 3/4"	3546	3546
245 VD-1	FP2-241	1	9 5/8"	9'-3"	18'-11 15/16	4359	4359
245 VD-1	FP2-242	1	9 5/8"	5'-11 5/16"	26'-10 11/16	3896	3896
245 VD-1	FP2-244	1	9 5/8"	8'-3 1/2"	26'-4"	5581	5581
245 VD-1	FP2-245	1	9 5/8"	8'-8 5/16"	26'-4"	5813	5813
245 VD-1	FP2-247	1	9 5/8"	4'-7 7/16"	18'-7 15/16"	2126	2126
245 VD-1	FP2-249	1	9 5/8"	9'-3"	39'-11 11/16	9453	9453
245 VD-1	FP2-251	1	9 5/8"	3'-7 1/2"	39'-11 11/16	2700	2700
245 VD-1	FP2-254	1	9 5/8"	6'-4 11/16"	38'-11 7/8"	5914	5914
245 VD-1	FP2-267	1	9 5/8"	1'-11 1/16"	12'-11 13/16	633	633
245 VD-1	FP2-268	1	9 5/8"	0'-11 1/8"	26'-8 13/16"	588	588
245 VD-1	FP2-269	1	9 5/8"	1'-9 1/2"	18'-10 5/8"	858	858
245 VD-1	FP2-270	1	9 5/8"	7'-1 1/2"	19'-7 1/16"	3564	3564
245 VD-1	FP2-271	1	9 5/8"	9'-3"	18'-7 15/16"	4415	4415
245 VD-1	FP2-272	1	9 5/8"	9'-3"	38'-11 7/8"	9167	9167
245 VD-1	FP2-273	1	9 5/8"	9'-3"	18'-7 15/16"	4415	4415
245 VD-1	FP2-274	1	9 5/8"	9'-3"	18'-7 15/16"	4415	4415
245 VD-1	FP2-275	1	9 5/8"	5'-7 5/16"	26'-4"	3755	3755
245 VD-1	FP2-278	1	9 5/8"	3'-1 3/8"	19'-7 1/16"	1485	1485
245 VD-1	FP2-279	1	9 5/8"	4'-7 7/16"	38'-11 15/16	4105	4105
105 ED-1	FP2-24	2	4 1/8"	9'-11 15/16"	39'-11 15/16	4365	8729
105 ED-1	FP2-25	14	4 1/8"	9'-11 15/16"	39'-11 15/16	4357	60991
105 ED-1	FP2-26	1	4 1/8"	9'-11 15/16"	39'-11 15/16	4341	4341
105 ED-1	FP2-27	1	4 1/8"	9'-11 15/16"	39'-11 15/16	4341	4341
105 ED-1	FP2-28	2	4 1/8"	9'-11 15/16"	39'-11 15/16	4337	8674
105 ED-1	FP2-29	1	4 1/8"	9'-11 15/16"	39'-11 15/16	4337	4337
105 ED-1	FP2-30	1	4 1/8"	9'-11 15/16"	39'-11 15/16	4361	4361
105 ED-1	FP2-31	1	4 1/8"	9'-11 15/16"	9'-11 15/16"	1078	1078
105 ED-1	FP2-32	1	4 1/8"	9'-11 15/16"	39'-11 15/16	4325	4325
105 ED-1	FP2-33	1	4 1/8"	9'-11 15/16"	39'-11 15/16	4321	4321
105 ED-1	FP2-34	1	4 1/8"	9'-11 15/16"	39'-11 15/16	4317	4317
105 ED-1	FP2-35	1	4 1/8"	9'-11 15/16"	9'-11 15/16"	1078	1078
105 ED-1	FP2-36	2	4 1/8"	9'-11 15/16"	39'-11 15/16	4365	8729
105 ED-1	FP2-37	2	4 1/8"	9'-11 15/16"	39'-11 15/16	4337	8674
105 ED-1	FP2-38	1	4 1/8"	9'-11 15/16"	9'-11 15/16"	1069	1069
105 ED-1	FP2-39	1	4 1/8"	9'-11 15/16"	39'-11 15/16	4355	4355
105 ED-1	FP2-40	3	4 1/8"	9'-11 15/16"	39'-11 15/16	4341	13022
105 ED-1	FP2-41	3	4 1/8"	9'-11 15/16"	39'-11 15/16	4341	13022
105 ED-1	FP2-42	1	4 1/8"	9'-11 15/16"	39'-11 15/16	4365	4365
105 ED-1	FP2-43	1	4 1/8"	9'-11 15/16"	39'-11 15/16	4344	4344
105 ED-1	FP2-45	2	4 1/8"	9'-11 15/16"	39'-11 15/16	4361	8721
105 ED-1	FP2-47	1	4 1/8"	9'-11 15/16"	9'-11 15/16"	1073	1073
105 ED-1	FP2-48	1	4 1/8"	9'-11 15/16"	39'-11 15/16	4348	4348
105 ED-1	FP2-49	1	4 1/8"	9'-11 15/16"	39'-11 15/16	4341	4341
105 ED-1	FP2-50	1	4 1/8"	9'-11 15/16"	39'-11 15/16	4341	4341
105 ED-1	FP2-52	1	4 1/8"	9'-11 15/16"	39'-11 15/16	4337	4337
105 ED-1	FP2-53	2	4 1/8"	9'-11 15/16"	9'-11 15/16"	1073	2145
105 ED-1	FP2-54	3	4 1/8"	9'-11 15/16"	9'-11 15/16"	1089	3266
105 ED-1	FP2-60	1	4 1/8"	9'-11 15/16"	39'-11 15/16	4325	4325
							936022

***WORK THIS SHEET WITH SL37

NOTES: (1)

1. * - DENOTES COMPOSITE CLT PANEL SECTION SEE SL24.
2. - DENOTES CHANGE IN TYPICAL CLT TO GLULAM FIXING INTO 6" SPACING

LEVEL 2 CLT PLAN

U/S OF CLT = EL. + 16'-9 7/8" (U.N.O.)

REV	DATE	REMARKS
1	12/31/2020	SMTC IFF layout revisions
0	04/30/2020	IFF
L	03/04/2020	Area B OFA
K	02/05/2020	Area B OFA
J	01/17/2020	Area A OFA glulam
I	12/11/2019	Area A OFA
H	11/18/2019	Area B Geo.
G	11/15/2019	Area B Geo.

Ref Dwg: S101

ISSUED SMTC IFF layo

DATE: 12/31/2020

STRUCTURLAM
MASS TIMBER CORPORATION
Intelligence In Wood

DATE 18/Jul/2019

BY CMI

DWG TITLE LEVEL 2 CLT PLAN

SHEET SL5

REV. 1

PROJECT BORREGAS

Job# 25991

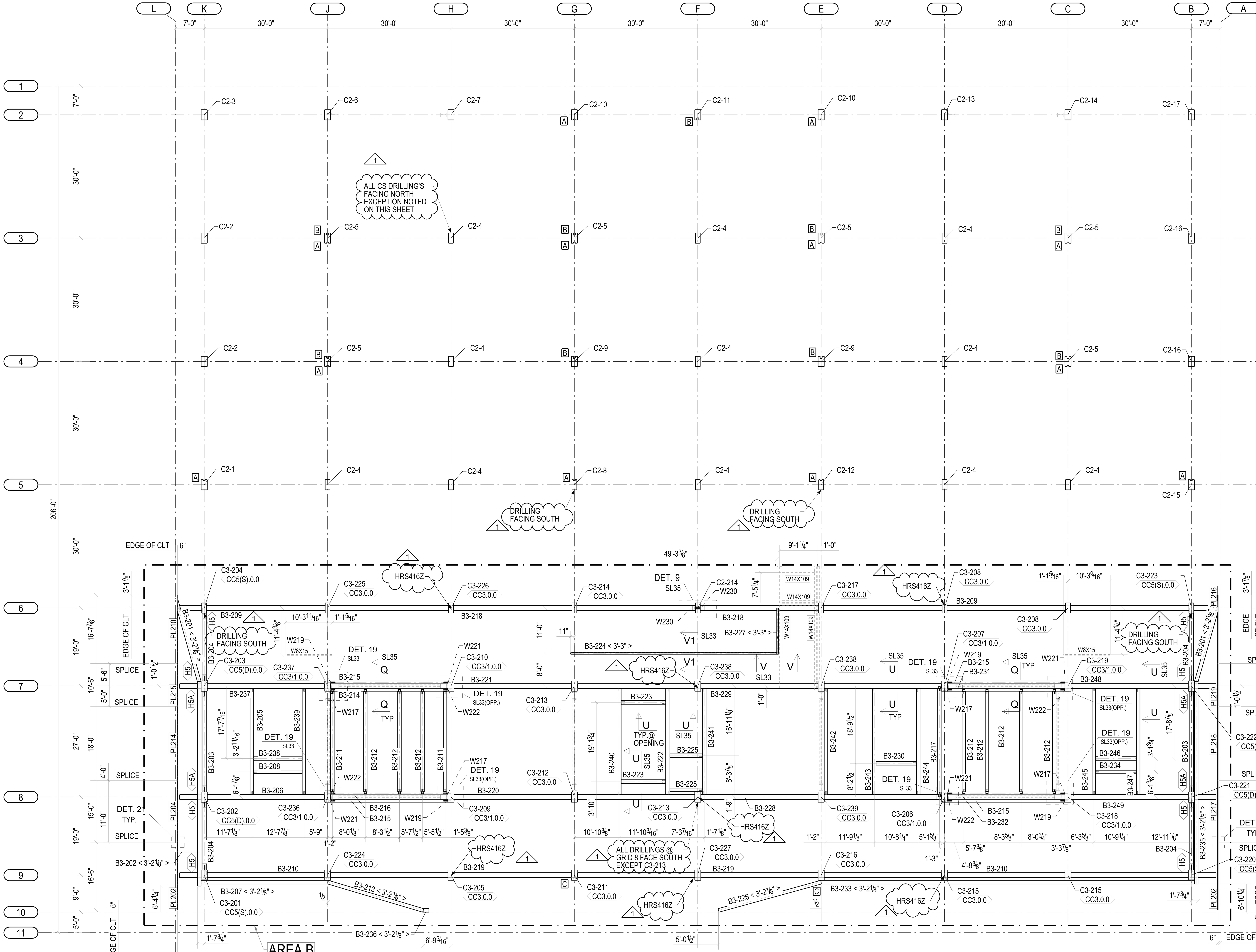

NOTES:

CC1,CC2,CC3,CC3(X),CC4,CC9, CCX SEE SL30 .
CC5(D), CC5(S), CC6(D) SEE SL31 .
CC7(D), CC7(S), CC8(S) SEE SL32 .

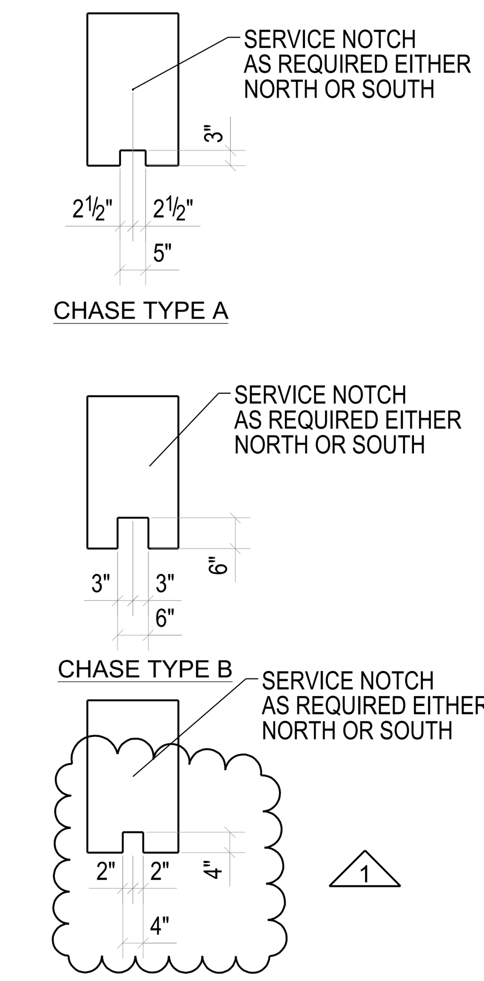

***WORK THIS SHEET WITH SL30 & SL31 SL33, SL34, SL35 & SL36

NOTES:

1. BX-X <±...> — BEAM MARK; DROP FROM U/S OF CLT ELEVATION
2. C -DENOTES CAMBER
3. GLULAM BEAMS ARE DROP BY 3/4" BELOW U/S OF CLT, UNLESS OTHERWISE NOTED
4. CX-XX / CCX.X.X — COLUMN BOTTOM LEVEL; COLUMN MARK; COLUMN CONNECTION TYPE (SEE COLUMN CONNECTION TYPE LEGEND)

COLUMN CONNECTION TYPE LEGEND:

1. CCX.0.0
   - PERIMETER CONDITION: 0 = NO (TYPICAL) 1 = YES, SEE 2 / S401
   - FIRE RATING CONDITION: 0 = TYPICAL 1 = EXTRA FIRE RATED
   - COLUMN CONNECTION TYPE NUMBER AS PER TYPICAL DETAILS

6/S401 REMOVED

IN ADDITION:

2. CCX(S).0.0
   - PURLIN TO COLUMN CONNECTION (WHEN APPLICABLE): S = SINGLE PURLIN, 1 SIDE ONLY, N/S DIR D = DOUBLE PURLIN, 1 EACH SIDE OF COL, N/S DIR

OR

3. CCX/0.0.0
   - ADJACENT SIDE CONNECTION (WHEN APPLICABLE): 0 = NO ADJACENT END CONNECTION TYPE 1 = ADJACENT END CONNECTION TYPE
   - TYPICAL COLUMN CONNECTION TYPE (SINGLE SIDE ONLY)

NOTE:

1. A B C - DENOTES CHASE TYPE (ON EITHER NORTH OR SOUTH SIDE OF THE THE COLUMN)

GLULAM SCHEDULE

TYPE	PROD No.	QTY	WIDTH	DEPTH	LENGTH	CAMBER	STRESS GRADE	FINISH	STATUS	WEIGHT (LB)	TOTAL WEIGHT
B	B3-201	2	10 1/2"	25"	21'-0 9/16"	N/A	24F-V4-DF/DF	Architectural		1135	2270
B	B3-202	1	10 1/2"	25"	49'-9 11/16"	N/A	24F-V8-DF/DF	Architectural		2905	2905
B	B3-203	2	12 1/4"	28 1/4"	24'-6"	N/A	24F-V4-DF/DF	Architectural	IFF RELEASED	1854	3708
B	B3-204	4	12 1/4"	28 1/4"	16'-6"	N/A	24F-V4-DF/DF	Architectural	IFF RELEASED	1240	4960
B	B3-205	1	10 1/4"	25 1/4"	25'-9 9/16"	N/A	24F-V4-DF/DF	Architectural	IFF RELEASED	1479	1479
B	B3-206	1	14 1/4"	31 1/4"	35'-11 5/8"	N/A	24F-V8-DF/DF	Architectural	IFF RELEASED	3542	3542
B	B3-207	1	10 1/2"	25"	30'-11 1/4"	N/A	24F-V4-DF/DF	Architectural		1803	1803
B	B3-208	1	10 1/4"	25 1/4"	11'-9 1/2"	N/A	24F-V4-DF/DF	Architectural	IFF RELEASED	675	675
B	B3-209	2	14 1/4"	31 1/4"	65'-11 7/8"	N/A	24F-V8-DF/DF	Architectural	IFF RELEASED	6508	13016
B	B3-210	2	14 1/4"	32 3/4"	65'-11 7/8"	N/A	24F-V8-DF/DF	Architectural	IFF RELEASED	6813	13626
B	B3-211	2	10 1/4"	25 1/4"	24'-6"	N/A	24F-V4-DF/DF	Architectural	IFF RELEASED	1396	2792
B	B3-212	7	10 1/4"	25 1/4"	24'-6"	N/A	24F-V4-DF/DF	Architectural	IFF RELEASED	1396	9773
B	B3-213	1	10 1/2"	25"	24'-2 3/16"	N/A	24F-V4-DF/DF	Architectural		1408	1408
B	B3-214	1	8 1/4"	35 3/4"	28'-6"	N/A	24F-V4+2 FACE	Architectural	IFF RELEASED	1853	1853
B	B3-215	4	8 1/4"	31 1/4"	28'-6"	N/A	24F-V4+2 FACE	Architectural	IFF RELEASED	1624	6495
B	B3-216	1	8 1/4"	35 3/4"	28'-6"	N/A	24F-V4+2 FACE	Architectural	IFF RELEASED	1853	1853
B	B3-217	1	10 1/4"	25 1/4"	25'-9 1/2"	N/A	24F-V4-DF/DF	Architectural	IFF RELEASED	1470	1470
B	B3-218	2	14 1/4"	31 1/4"	59'-4 11/16"	N/A	24F-V8-DF/DF	Architectural	IFF RELEASED	5849	11697
B	B3-219	2	14 1/4"	32 3/4"	59'-11 3/4"	N/A	24F-V8-DF/DF	Architectural	IFF RELEASED	6196	12392
B	B3-220	1	14 1/4"	31 1/4"	59'-11 1/2"	N/A	24F-V8-DF/DF	Architectural	IFF RELEASED	5911	5911
B	B3-221	1	14 1/4"	31 1/4"	59'-11 1/2"	N/A	24F-V8-DF/DF	Architectural	IFF RELEASED	5911	5911
B	B3-222	1	12 1/4"	25 1/4"	25'-9 9/16"	N/A	24F-V4-DF/DF	Architectural	IFF RELEASED	1770	1770
B	B3-223	2	12 1/4"	25 1/4"	10'-9 3/4"	N/A	24F-V4-DF/DF	Architectural	IFF RELEASED	741	1482
B	B3-224	1	5 1/8"	39"	50'-1 1/4"	N/A	24F-V8-DF/DF	Architectural	IFF RELEASED	2222	2222
B	B3-225	2	10 1/4"	25 1/4"	7'-11 1/8"	N/A	24F-V4-DF/DF	Architectural	IFF RELEASED	453	906
B	B3-226	1	10 1/2"	25"	25'-11 1/8"	N/A	24F-V4-DF/DF	Architectural		1511	1511
B	B3-227	1	5 1/8"	39"	11'-3"	N/A	24F-V4-DF/DF	Architectural	IFF RELEASED	499	499
B	B3-228	1	14 1/4"	31 1/4"	59'-11 1/2"	N/A	24F-V8-DF/DF	Architectural	IFF RELEASED	5910	5910
B	B3-229	1	14 1/4"	31 1/4"	59'-11 1/2"	N/A	24F-V8-DF/DF	Architectural	IFF RELEASED	5910	5910
B	B3-230	1	10 1/4"	25 1/4"	9'-9 7/8"	N/A	24F-V4-DF/DF	Architectural	IFF RELEASED	562	562
B	B3-231	1	8 1/4"	35 3/4"	28'-6"	N/A	24F-V4+2 FACE	Architectural	IFF RELEASED	1853	1853
B	B3-232	1	8 1/4"	35 3/4"	28'-6"	N/A	24F-V4+2 FACE	Architectural	IFF RELEASED	1853	1853
B	B3-233	1	10 1/2"	25"	90'-10 3/16"	N/A	24F-V8-DF/DF	Architectural		5302	5302
B	B3-234	1	10 1/4"	25 1/4"	9'-10 7/8"	N/A	24F-V4-DF/DF	Architectural	IFF RELEASED	566	566
B	B3-235	1	10 1/2"	25"	49'-3 3/4"	N/A	24F-V8-DF/DF	Architectural		2876	2876
B	B3-236	1	10 1/2"	25"	1'-4 9/16"	N/A	24F-V4-DF/DF	Architectural		80	80
B	B3-237	1	14 1/4"	31 1/4"	35'-11 5/8"	N/A	24F-V8-DF/DF	Architectural	IFF RELEASED	3542	3542
B	B3-238	1	10 1/4"	25 1/4"	11'-9 1/2"	N/A	24F-V4-DF/DF	Architectural	IFF RELEASED	675	675
B	B3-239	1	10 1/4"	25 1/4"	25'-9 9/16"	N/A	24F-V4-DF/DF	Architectural	IFF RELEASED	1479	1479
B	B3-240	1	12 1/4"	25 1/4"	25'-9 9/16"	N/A	24F-V4-DF/DF	Architectural	IFF RELEASED	1770	1770
B	B3-241	1	10 1/4"	25 1/4"	25'-9 9/16"	N/A	24F-V4-DF/DF	Architectural	IFF RELEASED	1479	1479
B	B3-242	1	10 1/4"	25 1/4"	25'-9 9/16"	N/A	24F-V4-DF/DF	Architectural	IFF RELEASED	1479	1479
B	B3-243	1	10 1/4"	25 1/4"	25'-9 9/16"	N/A	24F-V4-DF/DF	Architectural	IFF RELEASED	1479	1479
B	B3-244	1	10 1/4"	25 1/4"	25'-9 9/16"	N/A	24F-V4-DF/DF	Architectural	IFF RELEASED	1479	1479
B	B3-245	1	10 1/4"	25 1/4"	25'-9 9/16"	N/A	24F-V4-DF/DF	Architectural	IFF RELEASED	1479	1479
B	B3-246	1	10 1/4"	25 1/4"	9'-10 7/8"	N/A	24F-V4-DF/DF	Architectural	IFF RELEASED	566	566
B	B3-247	1	10 1/4"	25 1/4"	25'-9 9/16"	N/A	24F-V4-DF/DF	Architectural	IFF RELEASED	1479	1479
B	B3-248	1	14 1/4"	31 1/4"	35'-11 5/8"	N/A	24F-V8-DF/DF	Architectural	IFF RELEASED	3542	3542
B	B3-249	1	14 1/4"	31 1/4"	35'-11 5/8"	N/A	24F-V8-DF/DF	Architectural	IFF RELEASED	3542	3542
C	C2-1	1	17 3/4"	29 3/4"	30'-11 1/4"	N/A	L2D-DF/DF	Architectural	IFF RELEASED	3326	3326
C	C2-2	2	17 3/4"	29 3/4"	30'-11 1/4"	N/A	L2D-DF/DF	Architectural	IFF RELEASED	3429	6858
C	C2-3	1	17 3/4"	29 3/4"	30'-11 1/4"	N/A	L2D-DF/DF	Architectural	IFF RELEASED	3422	3422
C	C2-4	11	14 1/4"	29 3/4"	32'-4 1/8"	N/A	L2D-DF/DF	Architectural	IFF RELEASED	2816	30971
C	C2-5	6	17 3/4"	29 3/4"	32'-4 1/8"	N/A	L2D-DF/DF	Architectural	IFF RELEASED	3157	18941
C	C2-6	1	17 3/4"	29 3/4"	31'-1 3/4"	N/A	L2D-DF/DF	Architectural	IFF RELEASED	3433	3433
C	C2-7	1	17 3/4"	29 3/4"	31'-1 3/4"	N/A	L2D-DF/DF	Architectural	IFF RELEASED	3433	3433
C	C2-8	1	14 1/4"	29 3/4"	32'-4 1/8"	N/A	L2D-DF/DF	Architectural	IFF RELEASED	2711	2711
C	C2-9	2	17 3/4"	29 3/4"	32'-4 1/8"	N/A	L2D-DF/DF	Architectural	IFF RELEASED	3260	6520
C	C2-10	2	17 3/4"	29 3/4"	31'-1 3/4"	N/A	L2D-DF/DF	Architectural	IFF RELEASED	3277	6554
C	C2-11	1	17 3/4"	29 3/4"	31'-1 3/4"	N/A	L2D-DF/DF	Architectural	IFF RELEASED	3137	3137
C	C2-12	1	14 1/4"	29 3/4"	32'-4 1/8"	N/A	L2D-DF/DF	Architectural	IFF RELEASED	2711	2711
C	C2-13	1	17 3/4"	29 3/4"	31'-1 3/4"	N/A	L2D-DF/DF	Architectural	IFF RELEASED	3433	3433
C	C2-14	1	17 3/4"	29 3/4"	31'-1 3/4"	N/A	L2D-DF/DF	Architectural	IFF RELEASED	3433	3433
C	C2-15	1	17 3/4"	29 3/4"	30'-11 1/4"	N/A	L2D-DF/DF	Architectural	IFF RELEASED	3326	3326
C	C2-16	2	17 3/4"	29 3/4"	30'-11 1/4"	N/A	L2D-DF/DF	Architectural	IFF RELEASED	3429	6858
C	C2-17	1	17 3/4"	29 3/4"	30'-11 1/4"	N/A	L2D-DF/DF	Architectural	IFF RELEASED	3422	3422
C	C2-214	1	14 1/4"	29 3/4"	63'-1 1/2"	N/A	Comb3	Architectural	IFF RELEASED	5777	5777
C	C3-201	1	17 3/4"	29 3/4"	15'-6"	N/A	Comb2	Architectural	IFF RELEASED	1732	1732
C	C3-202	1	17 3/4"	29 3/4"	15'-6"	N/A	Comb2	Architectural	IFF RELEASED	1734	1734
C	C3-203	1	17 3/4"	29 3/4"	15'-6"	N/A	Comb2	Architectural	IFF RELEASED	1734	1734
C	C3-204	1	14 1/4"	29 3/4"	15'-6"	N/A	Comb2	Architectural	IFF RELEASED	1332	1332
C	C3-205	1	17 3/4"	29 3/4"	16'-7"	N/A	Comb2	Architectural	IFF RELEASED	1671	1671
C	C3-206	1	17 3/4"	29 3/4"	16'-7 3/8"	N/A	Comb2	Architectural	IFF RELEASED	1731	1731
C	C3-207	1	17 3/4"	29 3/4"	16'-7 3/8"	N/A	Comb2	Architectural	IFF RELEASED	1731	1731
C	C3-208	2	14 1/4"	29 3/4"	16'-7"	N/A	Comb2	Architectural	IFF RELEASED	1346	2693
C	C3-209	1	17 3/4"	29 3/4"	16'-7 3/8"	N/A	Comb2	Architectural	IFF RELEASED	1731	1731
C	C3-210	1	17 3/4"	29 3/4"	16'-7 3/8"	N/A	Comb2	Architectural	IFF RELEASED	1731	1731
C	C3-211	1	17 3/4"	29 3/4"	16'-7"	N/A	Comb2	Architectural	IFF RELEASED	1671	1671
C	C3-212	1	17 3/4"	29 3/4"	16'-7"	N/A	Comb2	Architectural	IFF RELEASED	1677	1677
C	C3-213	2	17 3/4"	29 3/4"	16'-7"	N/A	Comb2	Architectural	IFF RELEASED	1677	3355
C	C3-214	1	14 1/4"	29 3/4"	15'-7 3/4"	N/A	Comb2	Architectural	IFF RELEASED	1297	1297
C	C3-215	2	17 3/4"	29 3/4"	16'-7"	N/A	Comb2	Architectural	IFF RELEASED	1671	3341
C	C3-216	1	17 3/4"	29 3/4"	16'-7"	N/A	Comb2	Architectural	IFF RELEASED	1671	1671
C	C3-217	1	14 1/4"	29 3/4"	15'-7 3/4"	N/A	Comb2	Architectural	IFF RELEASED	1297	1297
C	C3-218	1	17 3/4"	29 3/4"	16'-7 3/8"	N/A	Comb2	Architectural	IFF RELEASED	1731	1731
C	C3-219	1	17 3/4"	29 3/4"	16'-7 3/8"	N/A	Comb2	Architectural	IFF RELEASED	1731	1731
C	C3-220	1	17 3/4"	29 3/4"	15'-6"	N/A	Comb2	Architectural	IFF RELEASED	1732	1732
C	C3-221	1	17 3/4"	29 3/4"	15'-6"	N/A	Comb2	Architectural	IFF RELEASED	1734	1734
C	C3-222	1	17 3/4"	29 3/4"	15'-6"	N/A	Comb2	Architectural	IFF RELEASED	1734	1734
C	C3-223	1	14 1/4"	29 3/4"	15'-6"	N/A	Comb2	Architectural	IFF RELEASED	1332	1332
C	C3-224	1	17 3/4"	29 3/4"	16'-7"	N/A	Comb2	Architectural	IFF RELEASED	1671	1671
C	C3-225	1	14 1/4"	29 3/4"	16'-7"	N/A	Comb2	Architectural	IFF RELEASED	1346	1346
C	C3-226	1	14 1/4"	29 3/4"	16'-7"	N/A	Comb2	Architectural	IFF RELEASED	1346	1346
C	C3-227	1	17 3/4"	29 3/4"	16'-7"	N/A	Comb2	Architectural	IFF RELEASED	1671	1671
C	C3-236	1	17 3/4"	29 3/4"	16'-7 3/8"	N/A	Comb2	Architectural	IFF RELEASED	1732	1732
C	C3-237	1	17 3/4"	29 3/4"	16'-7 3/8"	N/A	Comb2	Architectural	IFF RELEASED	1732	1732
C	C3-238	2	17 3/4"	29 3/4"	16'-7"	N/A	Comb2	Architectural	IFF RELEASED	1677	3354
C	C3-239	1	17 3/4"	29 3/4"	16'-7"	N/A	Comb2	Architectural	IFF RELEASED	1677	1677

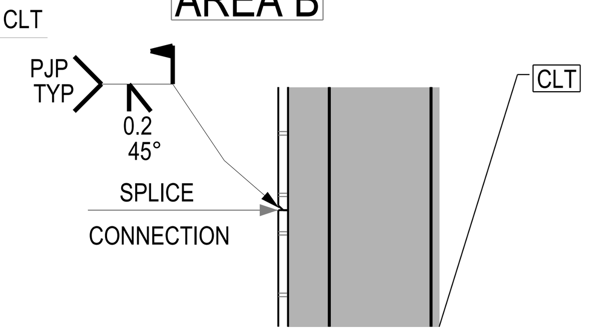

DETAIL 21
TYPICAL SIDE PLATE FIELD WELDING DETAIL

LEVEL 3 FRAMING PLAN

U/S OF CLT = EL+ 32'- 3 7/8" (U.N.O.)

REV	DATE	REMARKS
1	12/31/2020	SMTC IFF layout revisions
0	04/30/2020	IFF
L	03/04/2020	Area B OFA
K	02/05/2020	Area B OFA
J	01/17/2020	Area A OFA glulam
I	12/11/2019	Area A OFA
H	11/18/2019	Area B Geo.
G	11/15/2019	Area B Geo.

Ref Dwg: S102

ISSUED SMTC IFF layo

DATE: 12/31/2020

STRUCTURLAM
MASS TIMBER CORPORATION
Intelligence In Wood

DATE 18/Jul/2019
BY CMI
DWG TITLE LEVEL 3 FRAMING PLAN

SHEET SL6
REV. 1

PROJECT BORREGAS
Job# 25991

SEE SL41 FOR CLT PANEL SCHEDULE

CLT SCHEDULE

PANEL	PLAN			THICKNESS	WIDTH	HEIGHT	AREA (FT²)	AREA (MM²)
245 VD-1 XL	FP3-200		1	3 5/8"	8'-6 5/16"	37'-1 1/16"	8121	8121
245 VD-1 XL	FP3-201		1	3 5/8"	7'-1 1/2"	37'-1 1/16"	5040	5040
245 VD-1 XL	FP3-204		1	3 5/8"	6'-7 7/16"	37'-9 1/8"	3548	3548
245 VD-1 XL	FP3-206		1	3 5/8"	3'-1 1/2"	3'-4 5/16"	265	265
245 VD-1 XL	FP3-207		1	3 5/8"	6'-2"	37'-9 1/8"	6553	6553
245 VD-1 XL	FP3-208		1	3 5/8"	8'-0"	3'-4 5/16"	784	784
245 VD-1 XL	FP3-211		1	3 5/8"	8'-0"	37'-1 1/16"	7299	7299
245 VD-1 XL	FP3-214		1	3 5/8"	8'-0"	27'-2"	5412	5412
245 VD-1 XL	FP3-217		1	3 5/8"	8'-0"	27'-2"	5414	5414
245 VD-1 XL	FP3-220		1	3 5/8"	8'-0"	37'-1 1/16"	7329	7329
245 VD-1 XL	FP3-222		1	3 5/8"	8'-0"	37'-1 1/16"	8703	8703
245 VD-1 XL	FP3-225		1	3 5/8"	4'-7 7/16"	37'-1 1/16"	4153	4153
245 VD-1 XL	FP3-227		1	3 5/8"	8'-0"	37'-1 1/16"	8172	8172
245 VD-1 XL	FP3-229		1	3 5/8"	8'-0"	37'-1 9/16"	7247	7247
245 VD-1 XL	FP3-232		1	3 5/8"	8'-0"	37'-1 1/16"	7308	7308
245 VD-1 XL	FP3-236		1	3 5/8"	8'-0"	37'-1 1/16"	8707	8707
245 VD-1 XL	FP3-237		1	3 5/8"	8'-0"	37'-1 1/16"	7371	7371
245 VD-1 XL	FP3-239		1	3 5/8"	8'-0"	27'-9 1/8"	6553	6553
245 VD-1 XL	FP3-243		1	3 5/8"	8'-0"	27'-9 1/8"	6325	6325
245 VD-1 XL	FP3-248		1	3 5/8"	8'-0"	37'-1 1/16"	7794	7794
245 VD-1 XL	FP3-250		1	3 5/8"	1'-9 1/4"	6'-9"	147	147
245 VD-1 XL	FP3-251		1	3 5/8"	8'-0"	3'-8 13/16"	794	794
245 VD-1 XL	FP3-253		1	3 5/8"	1'-9 1/2"	6'-6 13/16"	153	153
245 VD-1 XL	FP3-255		1	3 5/8"	8'-6 3/16"	37'-1 1/16"	8121	8121
245 VD-1 XL	FP3-265		1	3 5/8"	8'-0"	37'-1 1/16"	8701	8701
245 VD-1 XL	FP3-267		1	3 5/8"	4'-7 9/16"	37'-1 1/16"	4154	4154
245 VD-1 XL	FP3-290		1	3 5/8"	8'-0"	27'-9 1/8"	6554	6554
245 VD-1 XL	FP3-292		1	3 5/8"	8'-0"	27'-2"	5414	5414
245 VD-1 XL	FP3-297		1	3 5/8"	8'-0"	37'-1 1/16"	8707	8707
245 VD-1 XL	FP3-298		1	3 5/8"	8'-0"	27'-2"	5414	5414
245 VD-1 XL	FP3-299		1	3 5/8"	8'-0"	27'-9 1/8"	6553	6553
245 VD-1 XL	FP3-300		1	3 5/8"	8'-7 7/16"	27'-9 1/8"	2548	2548
245 VD-1 XL	FP3-301		1	3 5/8"	7'-1 1/2"	27'-9 1/8"	5040	5040
245 VD-1 XL	FP3-400		1	3 5/8"	2'-1 1/2"	3'-9 1/2"	66	66
245 VD-1	FP3-201		1	3 5/8"	8'-6 3/16"	39'-11 13/16"	8143	8143
245 VD-1	FP3-202		1	3 5/8"	7'-7 7/16"	21'-9 5/8"	4344	4344
245 VD-1	FP3-205		1	3 5/8"	2'-1 1/2"	39'-9 7/16"	3000	3000
245 VD-1	FP3-209		1	3 5/8"	8'-0"	39'-9 7/16"	8232	8232
245 VD-1	FP3-212		1	3 5/8"	8'-0"	39'-9 7/16"	5774	5774
245 VD-1	FP3-213		1	3 5/8"	6'-10 1/8"	26'-4"	3883	3883
245 VD-1	FP3-215		1	3 5/8"	8'-0"	20'-10 1/2"	4938	4938
245 VD-1	FP3-216		1	3 5/8"	8'-8 7/16"	26'-4"	5570	5570
245 VD-1	FP3-218		1	3 5/8"	6'-7 7/16"	26'-4"	3796	3796
245 VD-1	FP3-219		1	3 5/8"	6'-10 13/16"	26'-4"	4862	4862
245 VD-1	FP3-221		1	3 5/8"	8'-0"	39'-9 7/16"	8885	8885
245 VD-1	FP3-223		1	3 5/8"	8'-0"	39'-9 7/16"	9185	9185
245 VD-1	FP3-224		1	3 5/8"	8'-0"	39'-9 7/16"	9185	9185
245 VD-1	FP3-226		1	3 5/8"	4'-7 7/16"	39'-9 7/16"	4588	4588
245 VD-1	FP3-228		1	3 5/8"	8'-0"	25'-6 13/16"	4539	4539
245 VD-1	FP3-230		1	3 5/8"	8'-0"	11'-9 3/8"	2745	2745
245 VD-1	FP3-233		1	3 5/8"	8'-0"	25'-6 13/16"	5809	5809
245 VD-1	FP3-234		1	3 5/8"	8'-0"	25'-6 13/16"	6501	6501
245 VD-1	FP3-235		1	3 5/8"	8'-0"	37'-5 1/16"	7515	7515
245 VD-1	FP3-238		1	3 5/8"	8'-0"	39'-9 7/16"	8957	8957
245 VD-1	FP3-240		1	3 5/8"	8'-0"	21'-9 5/8"	5158	5158
245 VD-1	FP3-241		1	3 5/8"	8'-0"	40'-0"	8917	8917
245 VD-1	FP3-242		1	3 5/8"	8'-0 13/16"	38'-8 3/8"	2555	2555
245 VD-1	FP3-244		1	3 5/8"	8'-0"	21'-9 7/16"	4842	4842
245 VD-1	FP3-245		1	3 5/8"	6'-11 5/16"	38'-8 3/4"	3893	3893
245 VD-1	FP3-246		1	3 5/8"	8'-0"	20'-10 1/2"	4938	4938
245 VD-1	FP3-247		1	3 5/8"	8'-7 13/16"	26'-4"	5782	5782
245 VD-1	FP3-249		1	3 5/8"	9'-0"	39'-9 7/16"	8755	8755
245 VD-1	FP3-253		1	3 5/8"	8'-0"	39'-9 7/16"	8357	8357
245 VD-1	FP3-254		1	3 5/8"	3'-7 3/16"	38'-9 7/16"	2743	2743
245 VD-1	FP3-256		1	3 5/8"	8'-6 3/16"	39'-11 13/16"	8144	8144
245 VD-1	FP3-257		1	3 5/8"	6'-3 1/2"	26'-4"	3577	3577
245 VD-1	FP3-286		1	3 5/8"	4'-7 1/2"	25'-6 13/16"	2763	2763
245 VD-1	FP3-288		1	3 5/8"	1'-11 11/16"	12'-11 13/16"	633	633
245 VD-1	FP3-289		1	3 5/8"	0'-11 1/8"	25'-1 5/8"	579	579
245 VD-1	FP3-291		1	3 5/8"	1'-9 1/2"	18'-3 5/16"	828	828
245 VD-1	FP3-293		1	3 5/8"	8'-7 5/16"	26'-4"	3746	3746
245 VD-1	FP3-294		1	3 5/8"	8'-0"	20'-10 1/2"	4938	4938
245 VD-1	FP3-295		1	3 5/8"	8'-0"	20'-10 1/2"	4938	4938
245 VD-1	FP3-296		1	3 5/8"	7'-1 1/2"	21'-9 5/8"	3966	3966
								265271

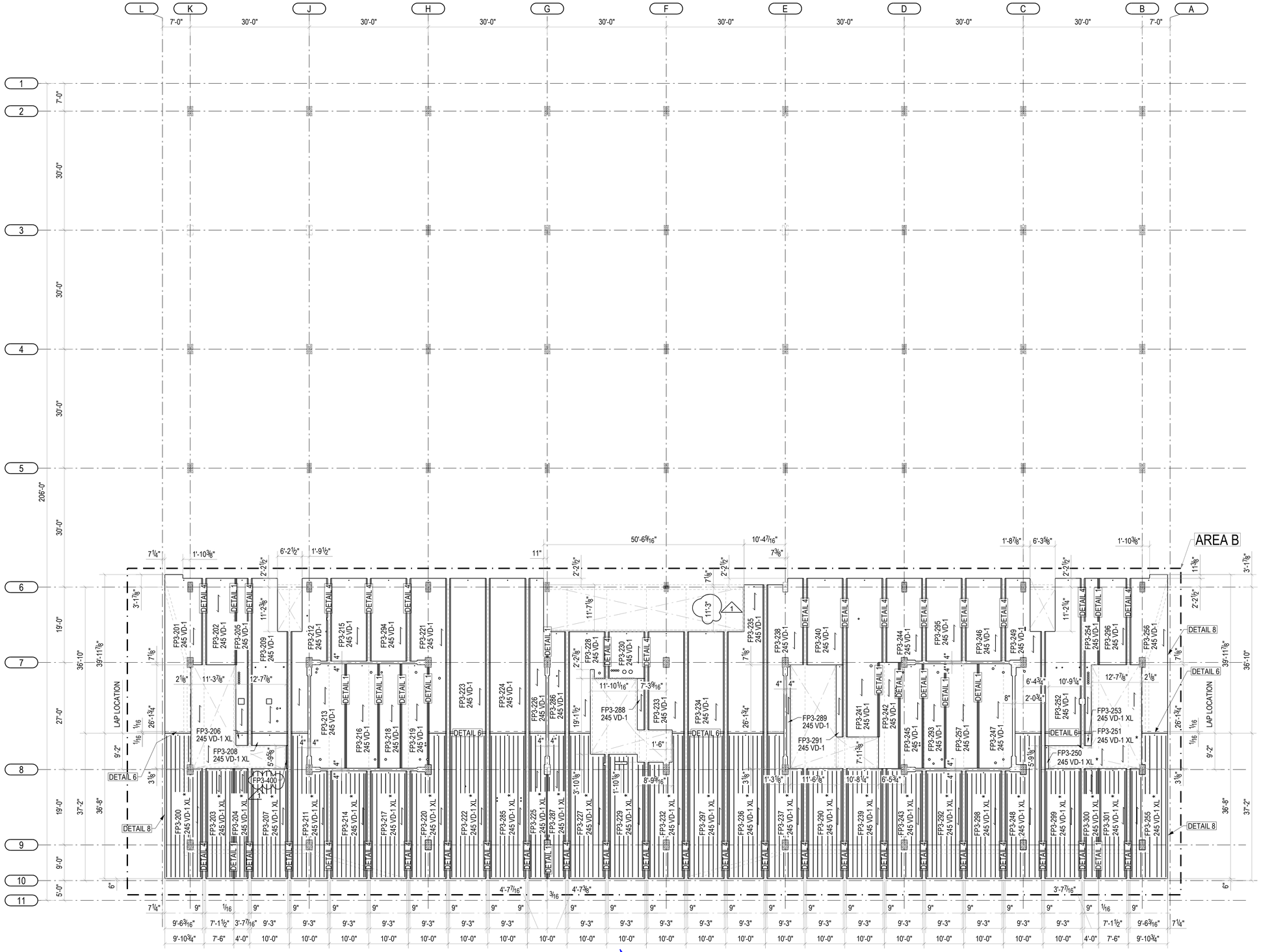

***WORK THIS SHEET WITH SL37

NOTES:
1. * - DENOTES COMPOSITE CLT PANEL SECTION SEE SL24
2. - DENOTES CHANGE IN TYPICAL CLT TO GLULAM FIXING INTO 6" SPACING

LEVEL 3 CLT PLAN

U/S OF CLT = EL. + 32'-3 7/8" (U.N.O.)

REV	DATE	REMARKS
1	12/31/2020	SMTC IFF layout revisions
0	04/30/2020	IFF
L	03/04/2020	Area B OFA
K	02/05/2020	Area B OFA
J	01/17/2020	Area A OFA glulam
I	12/11/2019	Area A OFA
H	11/18/2019	Area B Geo.
G	11/15/2019	Area B Geo.

Ref Dwg: S102

ISSUED SMTC IFF layo

DATE: 12/31/2020

STRUCTURLAM
MASS TIMBER CORPORATION
Intelligence In Wood

DATE 18/Jul/2019	SHEET SL7	REV. 1	PROJECT BORREGAS
BY CMI			Job# 25991
DWG TITLE LEVEL 3 CLT PLAN			

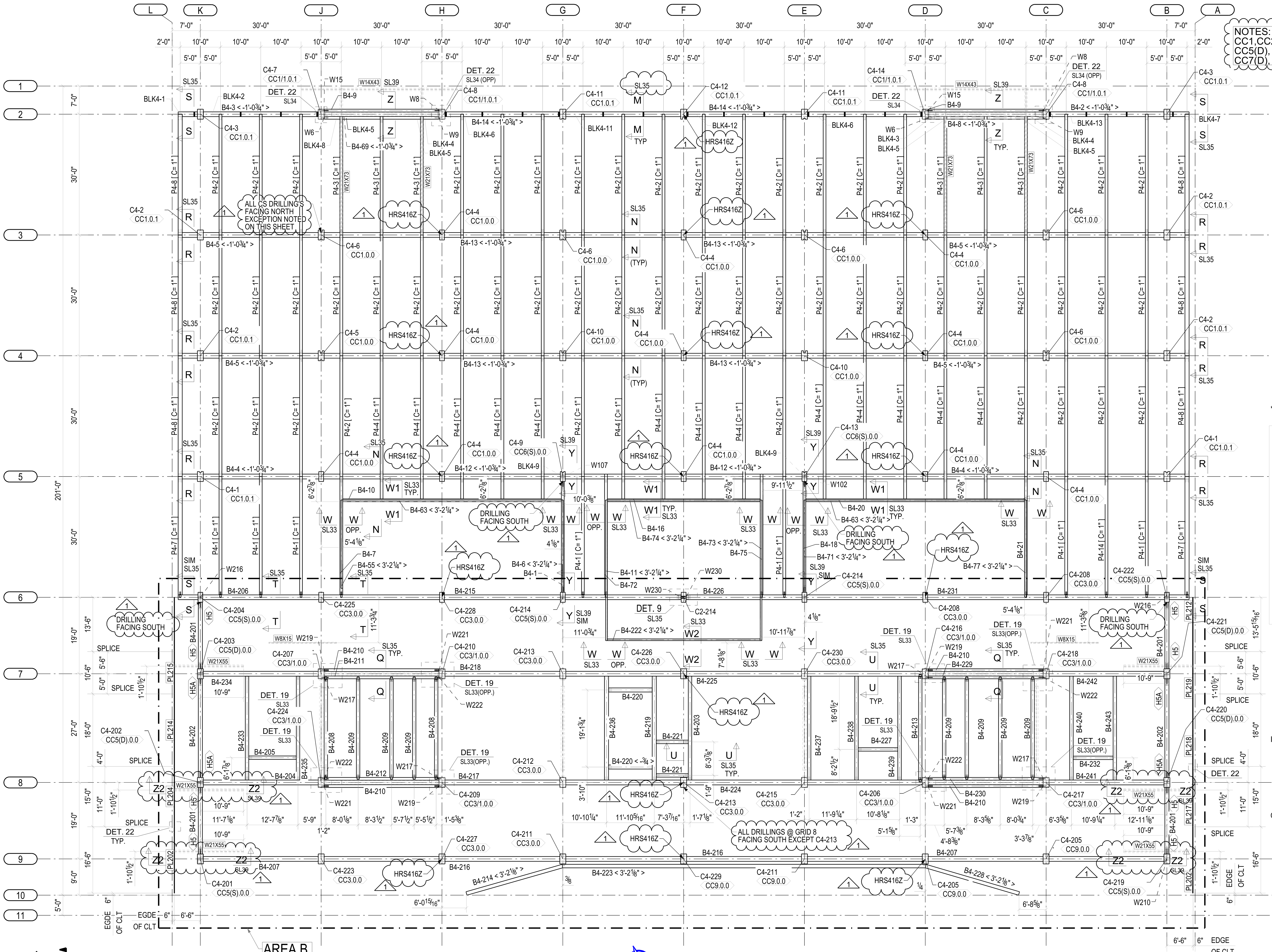

NOTES:
CC1,CC2,CC3,CC3(X),CC4,CC9, CCX SEE SL30 .
CC5(D), CC5(S), CC6(D) SEE SL31 .
CC7(D), CC7(S), CC8(S) SEE SL32 .

***WORK THIS SHEET WITH SL30 & SL31
SL33, SL34, SL35, SL36, & SL38

NOTES:

1. BX-X <±...>
   - BEAM MARK
   - DROP FROM U/S OF CLT ELEVATION
2. C -DENOTES CAMBER
3. GLULAM BEAMS ARE DROP BY ¾" BELOW U/S OF CLT, UNLESS OTHERWISE NOTED
4. CX-XX
   CCX.X.X
   - COLUMN BOTTOM LEVEL
   - COLUMN MARK
   - COLUMN CONNECTION TYPE (SEE COLUMN CONNECTION TYPE LEGEND)

COLUMN CONNECTION TYPE LEGEND:

1. CCX.0.0
   - PERIMETER CONDITION:
     0 = NO (TYPICAL)
     1 = YES, SEE 2 / S401
   - FIRE RATING CONDITION:
     0 = TYPICAL
     1 = EXTRA FIRE RATED
   - COLUMN CONNECTION TYPE NUMBER AS PER TYPICAL DETAILS

6/S401 REMOVED

IN ADDITION:
2. CCX(S).0.0
   - PURLIN TO COLUMN CONNECTION (WHEN APPLICABLE):
     S = SINGLE PURLIN, 1 SIDE ONLY, N/S DIR
     D = DOUBLE PURLIN, 1 EACH SIDE OF COL, N/S DIR

OR
3. CCX/0.0.0
   - ADJACENT SIDE CONNECTION (WHEN APPLICABLE):
     0 = NO ADJACENT END CONNECTION TYPE
     1 = ADJACENT END CONNECTION TYPE
   - TYPICAL COLUMN CONNECTION TYPE (SINGLE SIDE ONLY)

GLULAM SCHEDULE

TYPE	PROD No.	QTY	WIDTH	DEPTH	LENGTH	CAMBER	STRESS GRADE	FINISH	STATUS	WEIGHT (LB)	TOTAL WEIGHT
B	B4-1	1	8 1/4"	23 3/4"	27'-6"	N/A	24F-V4-DF/DF	Architectural	IFF RELEASED	1178	1178
B	B4-2	1	14 1/4"	32 3/4"	35'-5 3/4"	N/A	24F-V8-DF/DF	Architectural	IFF RELEASED	3661	3661
B	B4-3	1	14 1/4"	32 3/4"	35'-5 3/4"	N/A	24F-V8-DF/DF	Architectural	IFF RELEASED	3661	3661
B	B4-4	2	14 1/4"	31 1/4"	65'-6"	N/A	24F-V8-DF/DF	Architectural	IFF RELEASED	6457	12914
B	B4-5	4	14 1/4"	31 1/4"	65'-6"	N/A	24F-V8-DF/DF	Architectural	IFF RELEASED	6454	25818
B	B4-6	1	5 1/8"	39"	22'-11 1/4"	N/A	24F-V4-DF/DF	Architectural	IFF RELEASED	1017	1017
B	B4-7	1	8 1/4"	23 3/4"	29'-4 5/8"	N/A	24F-V4-DF/DF	Architectural	IFF RELEASED	1264	1264
B	B4-8	1	8 1/4"	34 1/4"	28'-6"	N/A	24F-V4+2 FACE	Architectural	IFF RELEASED	1779	1779
B	B4-9	2	8 1/4"	46 1/4"	28'-6"	N/A	24F-V4+2 FACE	Architectural	IFF RELEASED	2404	4807
B	B4-10	1	8 1/4"	23 3/4"	54'-3 5/8"	N/A	24F-V8-DF/DF	Architectural	IFF RELEASED	2367	2367
B	B4-11	1	5 1/8"	39"	34'-11 7/16"	N/A	24F-V4-DF/DF	Architectural	IFF RELEASED	1550	1550
B	B4-12	2	14 1/4"	31 1/4"	59'-11 3/4"	N/A	24F-V8-DF/DF	Architectural	IFF RELEASED	5918	11836
B	B4-13	4	14 1/4"	31 1/4"	59'-11 3/4"	N/A	24F-V8-DF/DF	Architectural	IFF RELEASED	5915	23662
B	B4-14	2	14 1/4"	32 3/4"	59'-11 1/2"	N/A	24F-V8-DF/DF	Architectural	IFF RELEASED	6194	12388
B	B4-16	1	8 1/4"	23 3/4"	37'-11 3/16"	N/A	24F-V8-DF/DF	Architectural	IFF RELEASED	1653	1653
B	B4-18	1	8 1/4"	23 3/4"	27'-6"	N/A	24F-V4-DF/DF	Architectural	IFF RELEASED	1178	1178
B	B4-20	1	8 1/4"	23 3/4"	54'-3 9/16"	N/A	24F-V8-DF/DF	Architectural	IFF RELEASED	2367	2367
B	B4-21	1	8 1/4"	23 3/4"	29'-4 5/8"	N/A	24F-V4-DF/DF	Architectural	IFF RELEASED	1264	1264
B	B4-55	1	5 1/8"	39"	21'-11 3/4"	N/A	24F-V4-DF/DF	Architectural	IFF RELEASED	974	974
B	B4-63	2	5 1/8"	39"	54'-3 9/16"	N/A	24F-V8-DF/DF	Architectural	IFF RELEASED	2407	4815
B	B4-69	1	8 1/4"	34 1/4"	28'-6"	N/A	24F-V4+2 FACE	Architectural	IFF RELEASED	1779	1779
B	B4-71	1	5 1/8"	39"	22'-11 1/4"	N/A	24F-V4-DF/DF	Architectural	IFF RELEASED	1017	1017
B	B4-72	1	8 1/4"	23 3/4"	29'-11 7/8"	N/A	24F-V4-DF/DF	Architectural	IFF RELEASED	1277	1277
B	B4-73	1	5 1/8"	39"	34'-11 7/16"	N/A	24F-V4-DF/DF	Architectural	IFF RELEASED	1550	1550
B	B4-74	1	5 1/8"	39"	37'-11 3/16"	N/A	24F-V8-DF/DF	Architectural	IFF RELEASED	1682	1682
B	B4-75	1	8 1/4"	23 3/4"	29'-11 7/8"	N/A	24F-V4-DF/DF	Architectural	IFF RELEASED	1277	1277
B	B4-77	1	5 1/8"	39"	24'-2 3/16"	N/A	24F-V4-DF/DF	Architectural	IFF RELEASED	1072	1072
B	B4-201	4	12 1/4"	28 1/4"	16'-6"	N/A	24F-V4-DF/DF	Architectural	IFF RELEASED	1240	4960
B	B4-202	2	12 1/4"	28 1/4"	24'-6"	N/A	24F-V4-DF/DF	Architectural	IFF RELEASED	1854	3708
B	B4-203	1	10 1/4"	25 1/4"	25'-9 9/16"	N/A	24F-V4-DF/DF	Architectural	IFF RELEASED	1479	1479
B	B4-204	1	14 1/4"	31 1/4"	29'-11 3/16"	N/A	24F-V4-DF/DF	Architectural	IFF RELEASED	2952	2952
B	B4-205	1	10 1/4"	25 1/4"	11'-9 1/2"	N/A	24F-V4-DF/DF	Architectural	IFF RELEASED	675	675
B	B4-206	1	14 1/4"	31 1/4"	65'-6"	N/A	24F-V8-DF/DF	Architectural	IFF RELEASED	6455	6455
B	B4-207	2	14 1/4"	32 3/4"	59'-11 1/2"	N/A	24F-V8-DF/DF	Architectural	IFF RELEASED	6194	12388
B	B4-208	2	10 1/4"	25 1/4"	24'-6"	N/A	24F-V4-DF/DF	Architectural	IFF RELEASED	1396	2792
B	B4-209	7	10 1/4"	25 1/4"	24'-6"	N/A	24F-V4-DF/DF	Architectural	IFF RELEASED	1396	9773
B	B4-210	4	8 1/4"	31 1/4"	28'-6"	N/A	24F-V4+2 FACE	Architectural	IFF RELEASED	1624	6495
B	B4-211	1	8 1/4"	35 3/4"	28'-6"	N/A	24F-V4+2 FACE	Architectural	IFF RELEASED	1853	1853
B	B4-212	1	8 1/4"	35 3/4"	28'-6"	N/A	24F-V4+2 FACE	Architectural	IFF RELEASED	1853	1853
B	B4-213	1	10 1/4"	25 1/4"	25'-9 1/2"	N/A	24F-V4-DF/DF	Architectural	IFF RELEASED	1470	1470
B	B4-214	1	10 1/2"	25"	24'-10 1/8"	N/A	24F-V4-DF/DF	Architectural		1447	1447
B	B4-215	1	14 1/4"	31 1/4"	59'-4 11/16"	N/A	24F-V8-DF/DF	Architectural	IFF RELEASED	5847	5847
B	B4-216	2	14 1/4"	32 3/4"	59'-11 3/4"	N/A	24F-V8-DF/DF	Architectural	IFF RELEASED	6196	12392
B	B4-217	1	14 1/4"	31 1/4"	59'-11 1/2"	N/A	24F-V8-DF/DF	Architectural	IFF RELEASED	5911	5911
B	B4-218	1	14 1/4"	31 1/4"	59'-11 1/2"	N/A	24F-V8-DF/DF	Architectural	IFF RELEASED	5911	5911
B	B4-219	1	12 1/4"	25 1/4"	25'-9 9/16"	N/A	24F-V4-DF/DF	Architectural	IFF RELEASED	1770	1770
B	B4-220	2	12 1/4"	25 1/4"	10'-9 7/8"	N/A	24F-V4-DF/DF	Architectural	IFF RELEASED	742	1483
B	B4-221	2	10 1/4"	25 1/4"	7'-11 1/8"	N/A	24F-V4-DF/DF	Architectural	IFF RELEASED	453	906
B	B4-222	1	5 1/8"	39"	37'-11 3/16"	N/A	24F-V4-DF/DF	Architectural	IFF RELEASED	1682	1682
B	B4-223	1	10 1/2"	25"	90'-3 5/8"	N/A	24F-V8-DF/DF	Architectural		5266	5266
B	B4-224	1	14 1/4"	31 1/4"	59'-11 1/2"	N/A	24F-V8-DF/DF	Architectural	IFF RELEASED	5910	5910
B	B4-225	1	14 1/4"	31 1/4"	59'-11 1/2"	N/A	24F-V8-DF/DF	Architectural	IFF RELEASED	5910	5910
B	B4-226	1	14 1/4"	31 1/4"	59'-4 11/16"	N/A	24F-V8-DF/DF	Architectural	IFF RELEASED	5847	5847
B	B4-227	1	10 1/4"	25 1/4"	9'-9 7/8"	N/A	24F-V4-DF/DF	Architectural	IFF RELEASED	562	562
B	B4-228	1	10 1/2"	25"	24'-2 7/8"	N/A	24F-V4-DF/DF	Architectural		1412	1412
B	B4-229	1	8 1/4"	35 3/4"	28'-6"	N/A	24F-V4+2 FACE	Architectural	IFF RELEASED	1853	1853
B	B4-230	1	8 1/4"	35 3/4"	28'-6"	N/A	24F-V4+2 FACE	Architectural	IFF RELEASED	1853	1853
B	B4-231	1	14 1/4"	31 1/4"	65'-6"	N/A	24F-V8-DF/DF	Architectural	IFF RELEASED	6455	6455
B	B4-232	1	10 1/4"	25 1/4"	9'-10 7/8"	N/A	24F-V4-DF/DF	Architectural	IFF RELEASED	567	567
B	B4-233	1	10 1/4"	25 1/4"	25'-9 9/16"	N/A	24F-V4-DF/DF	Architectural	IFF RELEASED	1479	1479
B	B4-234	1	14 1/4"	31 1/4"	29'-11 3/16"	N/A	24F-V4-DF/DF	Architectural	IFF RELEASED	2952	2952
B	B4-235	1	10 1/4"	25 1/4"	25'-9 9/16"	N/A	24F-V4-DF/DF	Architectural	IFF RELEASED	1479	1479
B	B4-236	1	12 1/4"	25 1/4"	25'-9 9/16"	N/A	24F-V4-DF/DF	Architectural	IFF RELEASED	1770	1770
B	B4-237	1	10 1/4"	25 1/4"	25'-9 9/16"	N/A	24F-V4-DF/DF	Architectural	IFF RELEASED	1479	1479
B	B4-238	1	10 1/4"	25 1/4"	25'-9 9/16"	N/A	24F-V4-DF/DF	Architectural	IFF RELEASED	1479	1479
B	B4-239	1	10 1/4"	25 1/4"	25'-9 9/16"	N/A	24F-V4-DF/DF	Architectural	IFF RELEASED	1479	1479
B	B4-240	1	10 1/4"	25 1/4"	25'-9 9/16"	N/A	24F-V4-DF/DF	Architectural	IFF RELEASED	1479	1479
B	B4-241	1	14 1/4"	31 1/4"	29'-11 3/16"	N/A	24F-V4-DF/DF	Architectural	IFF RELEASED	2952	2952
B	B4-242	1	14 1/4"	31 1/4"	29'-11 3/16"	N/A	24F-V4-DF/DF	Architectural	IFF RELEASED	2952	2952
B	B4-243	1	10 1/4"	25 1/4"	25'-9 9/16"	N/A	24F-V4-DF/DF	Architectural	IFF RELEASED	1479	1479
B	BLK4-1	1	14 1/4"	11 15/16"	4'-9 1/8"	N/A	24F-V4-DF/DF	Architectural	IFF RELEASED	158	158
B	BLK4-2	1	14 1/4"	11 15/16"	28'-6"	N/A	24F-V4-DF/DF	Architectural	IFF RELEASED	1032	1032
B	BLK4-3	1	8 1/4"	12"	3'-10 3/4"	N/A	24F-V4-DF/DF	Architectural	IFF RELEASED	86	86
B	BLK4-4	2	8 1/4"	12"	3'-10 3/4"	N/A	24F-V4-DF/DF	Architectural	IFF RELEASED	86	172
B	BLK4-5	4	8 1/4"	12"	9'-3 1/2"	N/A	24F-V4-DF/DF	Architectural	IFF RELEASED	205	820
B	BLK4-6	2	14 1/4"	11 15/16"	28'-6"	N/A	24F-V8-DF/DF	Architectural	IFF RELEASED	1031	2061
B	BLK4-7	1	14 1/4"	11 15/16"	4'-9 1/8"	N/A	24F-V4-DF/DF	Architectural	IFF RELEASED	158	158
B	BLK4-8	1	8 1/4"	12"	3'-10 3/4"	N/A	24F-V4-DF/DF	Architectural	IFF RELEASED	86	86
B	BLK4-9	2	13 1/4"	14 1/4"	1'-1 13/16"	N/A	L2D-DF/DF	Architectural	IFF RELEASED	48	97
B	BLK4-11	1	14 1/4"	11 15/16"	28'-6"	N/A	24F-V8-DF/DF	Architectural	IFF RELEASED	1034	1034
B	BLK4-12	1	14 1/4"	11 15/16"	28'-6"	N/A	24F-V8-DF/DF	Architectural	IFF RELEASED	1032	1032
B	BLK4-13	1	14 1/4"	11 15/16"	28'-6"	N/A	24F-V4-DF/DF	Architectural	IFF RELEASED	1032	1032
C	C2-214	1	14 1/4"	29 3/4"	63'-1 1/2"	N/A	Comb3	Architectural	IFF RELEASED	5777	5777
C	C4-1	2	17 3/4"	29 3/4"	31'-11 1/2"	N/A	L2D-DF/DF	Architectural	IFF RELEASED	3433	6867
C	C4-2	4	17 3/4"	29 3/4"	31'-11 1/2"	N/A	L2D-DF/DF	Architectural	IFF RELEASED	3536	14144
C	C4-3	2	17 3/4"	29 3/4"	31'-11 1/2"	N/A	L2D-DF/DF	Architectural	IFF RELEASED	3530	7060
C	C4-4	11	14 1/4"	29 3/4"	31'-11 1/2"	N/A	L2D-DF/DF	Architectural	IFF RELEASED	2838	31221
C	C4-5	1	17 3/4"	29 3/4"	31'-11 1/2"	N/A	L2D-DF/DF	Architectural	IFF RELEASED	3172	3172
C	C4-6	5	17 3/4"	29 3/4"	31'-11 1/2"	N/A	L2D-DF/DF	Architectural	IFF RELEASED	3187	15937
C	C4-7	1	17 3/4"	29 3/4"	31'-10 1/2"	N/A	L2D-DF/DF	Architectural	IFF RELEASED	3561	3561
C	C4-8	2	17 3/4"	29 3/4"	31'-10 1/2"	N/A	L2D-DF/DF	Architectural	IFF RELEASED	3561	7121
C	C4-9	1	14 1/4"	29 3/4"	30'-8 5/8"	N/A	L2D-DF/DF	Architectural	IFF RELEASED	2675	2675
C	C4-10	2	17 3/4"	29 3/4"	31'-11 1/2"	N/A	L2D-DF/DF	Architectural	IFF RELEASED	3290	6580
C	C4-11	2	17 3/4"	29 3/4"	31'-11 1/2"	N/A	L2D-DF/DF	Architectural	IFF RELEASED	3428	6855
C	C4-12	1	17 3/4"	29 3/4"	31'-11 1/2"	N/A	L2D-DF/DF	Architectural	IFF RELEASED	3284	3284
C	C4-13	1	14 1/4"	29 3/4"	30'-8 5/8"	N/A	L2D-DF/DF	Architectural	IFF RELEASED	2675	2675
C	C4-14	1	17 3/4"	29 3/4"	31'-10 1/2"	N/A	L2D-DF/DF	Architectural	IFF RELEASED	3561	3561
C	C4-201	1	17 3/4"	29 3/4"	15'-6"	N/A	Comb2	Architectural	IFF RELEASED	1654	1654
C	C4-202	1	17 3/4"	29 3/4"	15'-6"	N/A	Comb2	Architectural	IFF RELEASED	1659	1659
C	C4-203	1	17 3/4"	29 3/4"	15'-6"	N/A	Comb2	Architectural	IFF RELEASED	1659	1659
C	C4-204	1	14 1/4"	29 3/4"	15'-6"	N/A	Comb2	Architectural	IFF RELEASED	1332	1332
C	C4-205	2	17 3/4"	29 3/4"	16'-7"	N/A	Comb2	Architectural	IFF RELEASED	1671	3341
C	C4-206	1	17 3/4"	29 3/4"	16'-7 7/16"	N/A	Comb2	Architectural	IFF RELEASED	1732	1732
C	C4-207	1	17 3/4"	29 3/4"	16'-7 7/16"	N/A	Comb2	Architectural	IFF RELEASED	1732	1732
C	C4-208	2	14 1/4"	29 3/4"	16'-7"	N/A	Comb2	Architectural	IFF RELEASED	1346	2693
C	C4-209	1	17 3/4"	29 3/4"	16'-7 7/16"	N/A	Comb2	Architectural	IFF RELEASED	1732	1732
C	C4-210	1	17 3/4"	29 3/4"	16'-7 7/16"	N/A	Comb2	Architectural	IFF RELEASED	1732	1732
C	C4-211	2	17 3/4"	29 3/4"	16'-7"	N/A	Comb2	Architectural	IFF RELEASED	1671	3341
C	C4-212	1	17 3/4"	29 3/4"	16'-7"	N/A	Comb2	Architectural	IFF RELEASED	1677	1677
C	C4-213	2	17 3/4"	29 3/4"	16'-7"	N/A	Comb2	Architectural	IFF RELEASED	1677	3355
C	C4-214	2	14 1/4"	29 3/4"	16'-4 1/2"	N/A	Comb2	Architectural	IFF RELEASED	1382	2764
C	C4-215	1	17 3/4"	29 3/4"	16'-7"	N/A	Comb2	Architectural	IFF RELEASED	1677	1677
C	C4-216	1	17 3/4"	29 3/4"	16'-7 7/16"	N/A	Comb2	Architectural	IFF RELEASED	1732	1732
C	C4-217	1	17 3/4"	29 3/4"	16'-7 7/16"	N/A	Comb2	Architectural	IFF RELEASED	1732	1732
C	C4-218	1	17 3/4"	29 3/4"	16'-7 7/16"	N/A	Comb2	Architectural	IFF RELEASED	1732	1732
C	C4-219	1	17 3/4"	29 3/4"	15'-6"	N/A	Comb2	Architectural	IFF RELEASED	1654	1654
C	C4-220	1	17 3/4"	29 3/4"	15'-6"	N/A	Comb2	Architectural	IFF RELEASED	1659	1659
C	C4-221	1	17 3/4"	29 3/4"	15'-6"	N/A	Comb2	Architectural	IFF RELEASED	1659	1659
C	C4-222	1	14 1/4"	29 3/4"	15'-6"	N/A	Comb2	Architectural	IFF RELEASED	1332	1332
C	C4-223	1	17 3/4"	29 3/4"	16'-7"	N/A	Comb2	Architectural	IFF RELEASED	1671	1671
C	C4-224	1	17 3/4"	29 3/4"	16'-7 7/16"	N/A	Comb2	Architectural	IFF RELEASED	1732	1732
C	C4-225	1	14 1/4"	29 3/4"	16'-7"	N/A	Comb2	Architectural	IFF RELEASED	1346	1346
C	C4-226	1	17 3/4"	29 3/4"	16'-7"	N/A	Comb2	Architectural	IFF RELEASED	1677	1677
C	C4-227	1	17 3/4"	29 3/4"	16'-7"	N/A	Comb2	Architectural	IFF RELEASED	1671	1671
C	C4-228	1	14 1/4"	29 3/4"	16'-7"	N/A	Comb2	Architectural	IFF RELEASED	1346	1346
C	C4-229	1	17 3/4"	29 3/4"	16'-7"	N/A	Comb2	Architectural	IFF RELEASED	1671	1671
C	C4-230	1	17 3/4"	29 3/4"	16'-7"	N/A	Comb2	Architectural	IFF RELEASED	1677	1677
P	P4-1	7	8 1/4"	23 3/4"	29'-4 5/8"	1"	24F-V4-DF/DF	Architectural	IFF RELEASED	1265	8853
P	P4-2	52	8 1/4"	23 3/4"	29'-11 3/4"	1"	24F-V4-DF/DF	Architectural	IFF RELEASED	1282	66640
P	P4-3	6	8 1/4"	23 3/4"	29'-5 1/4"	1"	24F-V4-DF/DF	Architectural	IFF RELEASED	1256	7534
P	P4-4	14	8 1/4"	23 3/4"	35'-6 1/2"	1"	24F-V4-DF/DF	Architectural	IFF RELEASED	1511	21149
P	P4-7	2	12 1/4"	28 1/4"	29'-4 5/8"	1"	24F-V4-DF/DF	Architectural	IFF RELEASED	2230	4460
P	P4-8	6	12 1/4"	28 1/4"	29'-11 3/4"	1"	24F-V4-DF/DF	Architectural	IFF RELEASED	2253	13520
P	P4-14	1	8 1/4"	23 3/4"	29'-4 5/8"	1"	24F-V4-DF/DF	Architectural		1265	1265

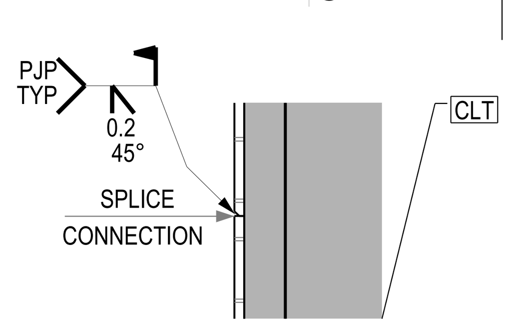

DETAIL 22
TYPICAL SIDE PLATE FIELD WELDING DETAIL

LEVEL 4 FRAMING PLAN
U/S OF CLT = EL+ 47'- 9 ⅞" (U.N.O.)

REV	DATE	REMARKS
1	12/31/2020	SMTC IFF layout revisions
0	04/30/2020	IFF
L	03/04/2020	Area B OFA
K	02/05/2020	Area B OFA
J	01/17/2020	Area A OFA glulam
I	12/11/2019	Area A OFA
H	11/18/2019	Area B Geo.
G	11/15/2019	Area B Geo.

Ref Dwg: S103

ISSUED SMTC IFF layo
DATE: 12/31/2020

STRUCTURLAM
MASS TIMBER CORPORATION
Intelligence In Wood

DATE 18/Jul/2019
BY CMI
DWG TITLE LEVEL 4 FRAMING PLAN
SHEET SL8
REV. 1
PROJECT BORREGAS
Job# 25991

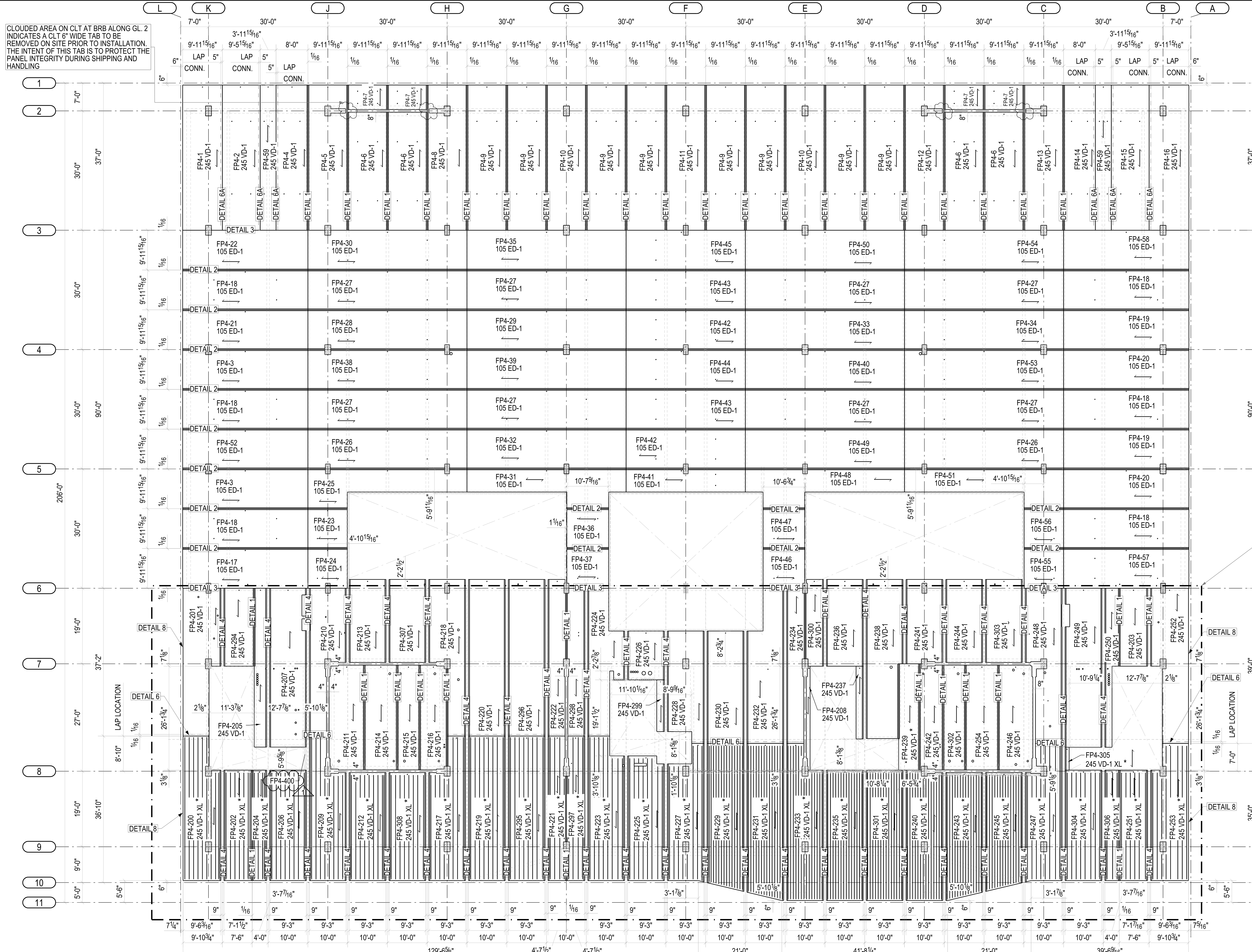

LEVEL 4 CLT PLAN

U/S OF CLT = EL. + 47'-9 7/8" (U.N.O.)

***WORK THIS SHEET WITH SL37

NOTES:
1. * - DENOTES COMPOSITE CLT PANEL SECTION SEE SL24.
2. - DENOTES CHANGE IN TYPICAL CLT TO GLULAM FIXING INTO 6" SPACING

SEE SL41 FOR CLT PANEL SCHEDULE

REV	DATE	REMARKS
1	12/31/2020	SMTC IFF layout revisions
L	03/04/2020	Area B OFA
K	02/05/2020	Area B OFA
J	01/17/2020	Area A OFA glulam
I	12/11/2019	Area A OFA
H	11/18/2019	Area B Geo.
G	11/15/2019	Area B Geo.
F	10/22/2019	Area B Geo.

Ref Dwg: S103

ISSUED SMTC IFF layo

DATE: 12/31/2020

STRUCTURLAM
MASS TIMBER CORPORATION
Intelligence In Wood

DATE 18/Jul/2019
BY CMI
DWG TITLE LEVEL 4 CLT PLAN

SHEET SL9

REV. 1

PROJECT
BORREGAS
Job# 25991

CLT SCHEDULE

TYPE	NAME	QTY	THICKNESS	WIDTH	LENGTH	WEIGHT(LB)	TOTAL WEIGHT
245 VD-1 XL	FP4-200	1	9 5/8"	9'-6 3/16"	36'-9 1/16"	8063	8063
245 VD-1 XL	FP4-202	1	9 5/8"	7'-1 1/2"	27'-9 1/8"	5039	5039
245 VD-1 XL	FP4-204	1	9 5/8"	3'-7 7/16"	27'-9 1/8"	2544	2544
245 VD-1 XL	FP4-206	1	9 5/8"	9'-3"	27'-9 1/8"	6556	6556
245 VD-1 XL	FP4-209	1	9 5/8"	9'-3"	36'-9 1/16"	7268	7268
245 VD-1 XL	FP4-212	1	9 5/8"	9'-3"	27'-2"	6414	6414
245 VD-1 XL	FP4-217	1	9 5/8"	9'-3"	36'-9 1/16"	7342	7342
245 VD-1 XL	FP4-219	1	9 5/8"	9'-3"	36'-9 1/16"	8630	8630
245 VD-1 XL	FP4-221	1	9 5/8"	4'-7 1/2"	36'-9 1/16"	4123	4123
245 VD-1 XL	FP4-223	1	9 5/8"	9'-3"	36'-9 1/16"	8127	8127
245 VD-1 XL	FP4-225	1	9 5/8"	9'-3"	31'-4 1/8"	7249	7249
245 VD-1 XL	FP4-227	1	9 5/8"	9'-3"	35'-3 1/4"	7167	7167
245 VD-1 XL	FP4-229	1	9 5/8"	9'-3"	37'-7 13/16"	8569	8569
245 VD-1 XL	FP4-231	1	9 5/8"	9'-3"	39'-11 1/16"	9130	9130
245 VD-1 XL	FP4-233	1	9 5/8"	9'-3"	39'-11 1/16"	8304	8304
245 VD-1 XL	FP4-235	1	9 5/8"	9'-3"	32'-9 1/8"	7725	7725
245 VD-1 XL	FP4-240	1	9 5/8"	9'-3"	32'-9 1/8"	7499	7499
245 VD-1 XL	FP4-243	1	9 5/8"	9'-3"	32'-2"	7351	7351
245 VD-1 XL	FP4-245	1	9 5/8"	9'-3"	29'-10 3/4"	6790	6790
245 VD-1 XL	FP4-247	1	9 5/8"	9'-3"	35'-3 1/4"	7434	7434
245 VD-1 XL	FP4-251	1	9 5/8"	7'-1 7/16"	27'-9 1/8"	5038	5038
245 VD-1 XL	FP4-253	1	9 5/8"	9'-6 3/16"	34'-11 1/16"	7755	7755
245 VD-1 XL	FP4-295	1	9 5/8"	9'-3"	36'-9 1/16"	8630	8630
245 VD-1 XL	FP4-297	1	9 5/8"	4'-7 1/2"	36'-9 1/16"	4123	4123
245 VD-1 XL	FP4-301	1	9 5/8"	9'-3"	32'-9 1/8"	7725	7725
245 VD-1 XL	FP4-304	1	9 5/8"	9'-3"	27'-9 1/8"	6556	6556
245 VD-1 XL	FP4-305	1	9 5/8"	1'-0 1/4"	5'-9"	147	147
245 VD-1 XL	FP4-306	1	9 5/8"	3'-7 7/16"	27'-9 1/8"	2544	2544
245 VD-1 XL	FP4-308	1	9 5/8"	9'-3"	27'-2"	6416	6416
245 VD-1	FP4-1	1	9 5/8"	10'-0"	36'-5 15/16"	9044	9044
245 VD-1	FP4-2	1	9 5/8"	9'-11"	36'-5 15/16"	8910	8910
245 VD-1	FP4-4	1	9 5/8"	8'-0"	36'-5 15/16"	7289	7289
245 VD-1	FP4-5	1	9 5/8"	9'-11 15/16"	36'-5 15/16"	9086	9086
245 VD-1	FP4-6	4	9 5/8"	9'-11 15/16"	29'-7 15/16"	7588	30353
245 VD-1	FP4-7	4	9 5/8"	9'-11 15/16"	6'-2"	1577	6310
245 VD-1	FP4-8	1	9 5/8"	9'-11 15/16"	36'-5 15/16"	9099	9099
245 VD-1	FP4-9	8	9 5/8"	9'-11 15/16"	36'-5 15/16"	9336	74692
245 VD-1	FP4-10	2	9 5/8"	9'-11 15/16"	36'-5 15/16"	9192	18384
245 VD-1	FP4-11	1	9 5/8"	9'-11 15/16"	36'-5 15/16"	9201	9201
245 VD-1	FP4-12	1	9 5/8"	9'-11 15/16"	36'-5 15/16"	9095	9095
245 VD-1	FP4-13	1	9 5/8"	9'-11 15/16"	36'-5 15/16"	9089	9089
245 VD-1	FP4-14	1	9 5/8"	8'-0"	36'-5 15/16"	7287	7287
245 VD-1	FP4-15	1	9 5/8"	9'-11"	36'-5 15/16"	8913	8913
245 VD-1	FP4-16	1	9 5/8"	10'-0"	36'-5 15/16"	9046	9046
245 VD-1	FP4-59	2	9 5/8"	4'-10"	36'-5 15/16"	4141	8282
245 VD-1	FP4-201	1	9 5/8"	9'-6 3/16"	37'-1 7/8"	7581	7581
245 VD-1	FP4-203	1	9 5/8"	7'-1 7/16"	19'-7 1/16"	3562	3562
245 VD-1	FP4-205	1	9 5/8"	3'-1 1/2"	39'-11 3/16"	3146	3146
245 VD-1	FP4-207	1	9 5/8"	9'-3"	39'-11 3/16"	9196	9196
245 VD-1	FP4-208	1	9 5/8"	0'-11 1/8"	26'-1 9/16"	581	581
245 VD-1	FP4-210	1	9 5/8"	9'-3"	37'-1 7/8"	6280	6280
245 VD-1	FP4-211	1	9 5/8"	8'-10 1/8"	26'-4"	5889	5889
245 VD-1	FP4-213	1	9 5/8"	9'-3"	20'-10 1/2"	4939	4939
245 VD-1	FP4-214	1	9 5/8"	8'-3 7/16"	26'-4"	5570	5570
245 VD-1	FP4-215	1	9 5/8"	5'-7 7/16"	26'-4"	3766	3766
245 VD-1	FP4-216	1	9 5/8"	6'-10 13/16"	26'-4"	4569	4569
245 VD-1	FP4-218	1	9 5/8"	9'-3"	39'-4 7/16"	6924	6924
245 VD-1	FP4-220	1	9 5/8"	9'-3"	39'-4 7/16"	9266	9266
245 VD-1	FP4-222	1	9 5/8"	4'-7 1/2"	39'-4 7/16"	4370	4370
245 VD-1	FP4-224	1	9 5/8"	9'-3"	37'-1 7/8"	6244	6244
245 VD-1	FP4-226	1	9 5/8"	9'-3"	12'-3 1/8"	2854	2854
245 VD-1	FP4-228	1	9 5/8"	9'-3"	28'-2 11/16"	6097	6097
245 VD-1	FP4-230	1	9 5/8"	9'-3"	28'-2 11/16"	6628	6628
245 VD-1	FP4-232	1	9 5/8"	9'-3"	38'-11 7/8"	8057	8057
245 VD-1	FP4-234	1	9 5/8"	4'-7 1/2"	38'-11 7/8"	4337	4337
245 VD-1	FP4-236	1	9 5/8"	9'-3"	21'-9 5/8"	5159	5159
245 VD-1	FP4-237	1	9 5/8"	1'-9 9/16"	18'-3 7/16"	831	831
245 VD-1	FP4-238	1	9 5/8"	9'-3"	39'-11 15/16	8920	8920
245 VD-1	FP4-239	1	9 5/8"	5'-2 11/16"	26'-8 3/4"	3554	3554
245 VD-1	FP4-241	1	9 5/8"	9'-3"	21'-2 7/16"	4846	4846
245 VD-1	FP4-242	1	9 5/8"	5'-11 5/16"	26'-8 11/16"	3895	3895
245 VD-1	FP4-244	1	9 5/8"	9'-3"	20'-10 1/2"	4940	4940
245 VD-1	FP4-246	1	9 5/8"	8'-7 13/16"	26'-4"	5788	5788
245 VD-1	FP4-248	1	9 5/8"	9'-3"	38'-11 7/8"	7620	7620
245 VD-1	FP4-249	1	9 5/8"	9'-3"	39'-11 11/16	9289	9289
245 VD-1	FP4-250	1	9 5/8"	3'-7 7/16"	39'-11 11/16	2695	2695
245 VD-1	FP4-252	1	9 5/8"	9'-6 3/16"	38'-11 7/8"	7894	7894
245 VD-1	FP4-254	1	9 5/8"	8'-3 1/2"	26'-4"	5577	5577
245 VD-1	FP4-294	1	9 5/8"	7'-7 7/16"	19'-7 1/16"	3814	3814
245 VD-1	FP4-296	1	9 5/8"	9'-3"	39'-4 7/16"	9265	9265
245 VD-1	FP4-298	1	9 5/8"	4'-7 1/2"	37'-1 7/8"	4135	4135
245 VD-1	FP4-299	1	9 5/8"	1'-11 1/16"	12'-11 13/16	633	633
245 VD-1	FP4-300	1	9 5/8"	4'-7 1/2"	21'-9 5/8"	2484	2484
245 VD-1	FP4-302	1	9 5/8"	5'-7 5/16"	26'-4"	3752	3752
245 VD-1	FP4-303	1	9 5/8"	9'-3"	20'-10 1/2"	4933	4933
245 VD-1	FP4-307	1	9 5/8"	9'-3"	20'-10 1/2"	4939	4939
105 ED-1	FP4-3	2	4 1/8"	9'-11 15/16"	31'-5 15/16"	3411	6823
105 ED-1	FP4-17	1	4 1/8"	9'-11 15/16"	31'-5 15/16"	3433	3433
105 ED-1	FP4-18	6	4 1/8"	9'-11 15/16"	31'-5 15/16"	3431	20586
105 ED-1	FP4-19	2	4 1/8"	9'-11 15/16"	31'-5 15/16"	3411	6823
105 ED-1	FP4-20	2	4 1/8"	9'-11 15/16"	31'-5 15/16"	3411	6823
105 ED-1	FP4-21	1	4 1/8"	9'-11 15/16"	31'-5 15/16"	3411	3411
105 ED-1	FP4-22	1	4 1/8"	9'-11 15/16"	31'-5 15/16"	3430	3430
105 ED-1	FP4-23	1	4 1/8"	9'-11 15/16"	9'-10 15/16"	1079	1079
105 ED-1	FP4-24	1	4 1/8"	9'-11 15/16"	9'-10 15/16"	1069	1069
105 ED-1	FP4-25	1	4 1/8"	9'-11 15/16"	39'-11 15/16	2955	2955
105 ED-1	FP4-26	2	4 1/8"	9'-11 15/16"	39'-11 15/16	4325	8650
105 ED-1	FP4-27	8	4 1/8"	9'-11 15/16"	39'-11 15/16	4357	34852
105 ED-1	FP4-28	1	4 1/8"	9'-11 15/16"	39'-11 15/16	4321	4321
105 ED-1	FP4-29	1	4 1/8"	9'-11 15/16"	39'-11 15/16	4337	4337
105 ED-1	FP4-30	1	4 1/8"	9'-11 15/16"	39'-11 15/16	4344	4344
105 ED-1	FP4-31	1	4 1/8"	9'-11 15/16"	39'-11 15/16	2999	2999
105 ED-1	FP4-32	1	4 1/8"	9'-11 15/16"	39'-11 15/16	4341	4341
105 ED-1	FP4-33	1	4 1/8"	9'-11 15/16"	39'-11 15/16	4337	4337
105 ED-1	FP4-34	1	4 1/8"	9'-11 15/16"	39'-11 15/16	4321	4321
105 ED-1	FP4-35	1	4 1/8"	9'-11 15/16"	39'-11 15/16	4361	4361
105 ED-1	FP4-36	1	4 1/8"	9'-11 15/16"	10'-6 9/16"	1149	1149
105 ED-1	FP4-37	1	4 1/8"	9'-11 15/16"	10'-6 9/16"	1148	1148
105 ED-1	FP4-38	1	4 1/8"	9'-11 15/16"	39'-11 15/16	4318	4318
105 ED-1	FP4-39	1	4 1/8"	9'-11 15/16"	39'-11 15/16	4337	4337
105 ED-1	FP4-40	1	4 1/8"	9'-11 15/16"	39'-11 15/16	4337	4337
105 ED-1	FP4-41	1	4 1/8"	5'-9 3/4"	29'-11 15/16	1887	1887
105 ED-1	FP4-42	2	4 1/8"	9'-11 15/16"	29'-11 15/16	3251	6503
105 ED-1	FP4-43	2	4 1/8"	9'-11 15/16"	29'-11 15/16	3267	6534
105 ED-1	FP4-44	1	4 1/8"	9'-11 15/16"	29'-11 15/16	3251	3251
105 ED-1	FP4-45	1	4 1/8"	9'-11 15/16"	29'-11 15/16	3269	3269
105 ED-1	FP4-46	1	4 1/8"	9'-11 15/16"	10'-5 11/16"	1140	1140
105 ED-1	FP4-47	1	4 1/8"	9'-11 15/16"	10'-5 11/16"	1141	1141
105 ED-1	FP4-48	1	4 1/8"	9'-11 15/16"	39'-11 15/16	2996	2996
105 ED-1	FP4-49	1	4 1/8"	9'-11 15/16"	39'-11 15/16	4341	4341
105 ED-1	FP4-50	1	4 1/8"	9'-11 15/16"	39'-11 15/16	4361	4361
105 ED-1	FP4-51	1	4 1/8"	9'-11 15/16"	39'-11 15/16	2955	2955
105 ED-1	FP4-52	1	4 1/8"	9'-11 15/16"	31'-5 15/16"	3411	3411
105 ED-1	FP4-53	1	4 1/8"	9'-11 15/16"	39'-11 15/16	4318	4318
105 ED-1	FP4-54	1	4 1/8"	9'-11 15/16"	39'-11 15/16	4344	4344
105 ED-1	FP4-55	1	4 1/8"	9'-11 15/16"	9'-10 15/16"	1069	1069
105 ED-1	FP4-56	1	4 1/8"	9'-11 15/16"	9'-10 15/16"	1079	1079
105 ED-1	FP4-57	1	4 1/8"	9'-11 15/16"	31'-5 15/16"	3434	3434
105 ED-1	FP4-58	1	4 1/8"	9'-11 15/16"	31'-5 15/16"	3430	3430
							847204

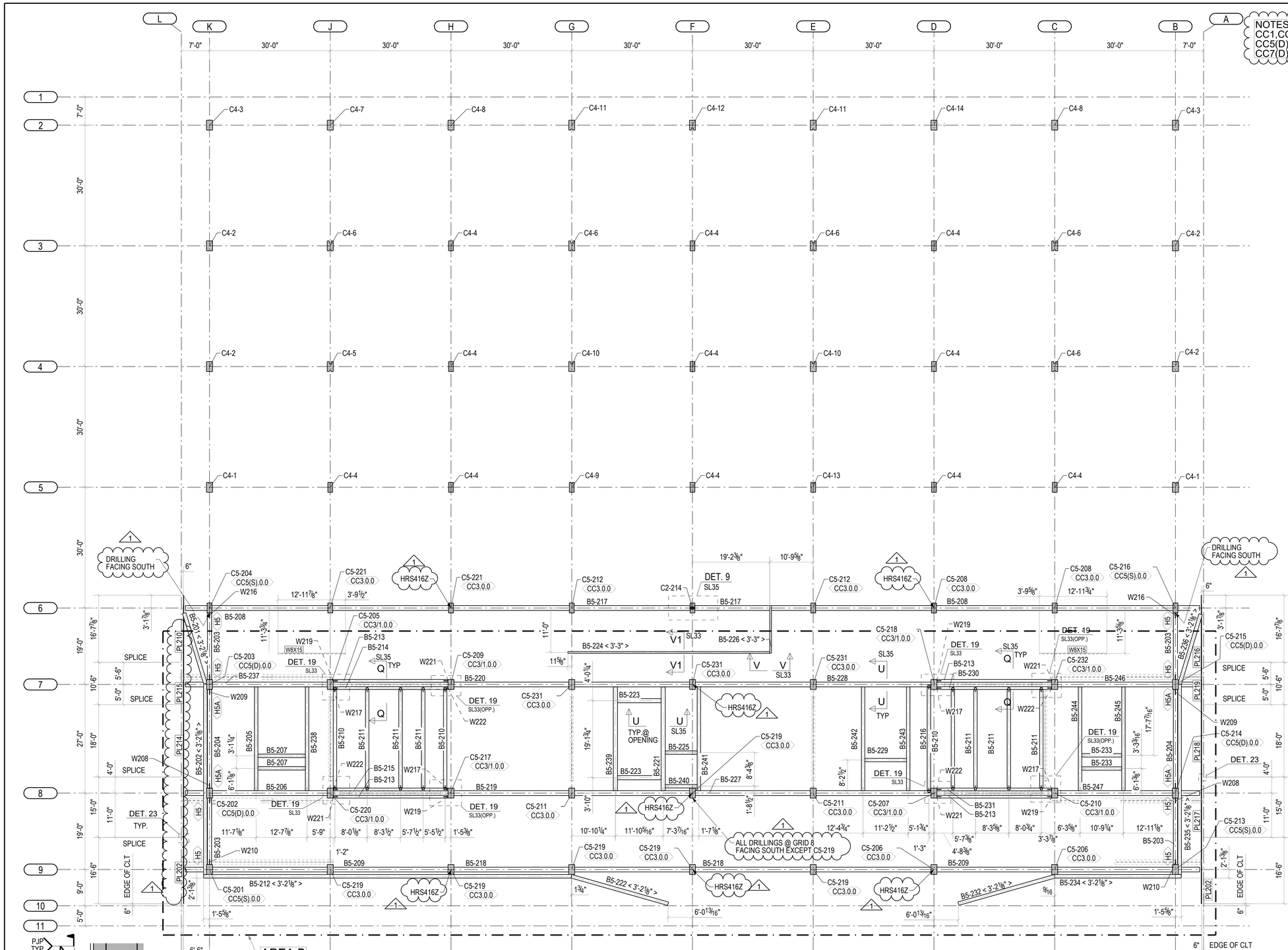

NOTES:
CC1,CC2,CC3,CC3(X),CC4,CC9, CCX SEE SL30 .
CC5(D), CC5(S), CC6(D) SEE SL31 .
CC7(D), CC7(S), CC8(S) SEE SL32 .

1

***WORK THIS SHEET WITH SL30 & SL31
SL33, SL34, SL35 & SL36

NOTES:

1. BX-X <±...> — BEAM MARK; DROP FROM U/S OF CLT ELEVATION
2. C -DENOTES CAMBER
3. GLULAM BEAMS ARE DROP BY 3/4" BELOW U/S OF CLT, UNLESS OTHERWISE NOTED
4. CX-XX CCX.X.X — COLUMN BOTTOM LEVEL; COLUMN MARK; COLUMN CONNECTION TYPE (SEE COLUMN CONNECTION TYPE LEGEND)

COLUMN CONNECTION TYPE LEGEND:

1. CCX.0.0
   - PERIMETER CONDITION: 0 = NO (TYPICAL); 1 = YES, SEE 2 / S401
   - FIRE RATING CONDITION: 0 = TYPICAL; 1 = EXTRA FIRE RATED
   - COLUMN CONNECTION TYPE NUMBER AS PER TYPICAL DETAILS

IN ADDITION:

2. CCX(S).0.0
   - PURLIN TO COLUMN CONNECTION (WHEN APPLICABLE): S = SINGLE PURLIN, 1 SIDE ONLY, N/S DIR; D = DOUBLE PURLIN, 1 EACH SIDE OF COL, N/S DIR

OR

3. CCX/0.0.0
   - ADJACENT SIDE CONNECTION (WHEN APPLICABLE): 0 = NO ADJACENT END CONNECTION TYPE; 1 = ADJACENT END CONNECTION TYPE
   - TYPICAL COLUMN CONNECTION TYPE (SINGLE SIDE ONLY)

1 — 6/S401 REMOVED

GLULAM SCHEDULE

QTY	BEAM NO.	LEVEL	WIDTH	DEPTH	LENGTH	CAMBER	TOP DROP	CSA	CSA	CSA	SHIPPING WEIGHT	SHIPPING WEIGHT
1	B1-20	1	10 1/4"	21 1/2"	18'-0"	NA	3/4" UA-DF2-F	Architectural	R1-GLULAM	1,000	1,000	1,000
1	B1-22	1	10 1/4"	21	41'-6 1/4"	NA	3/4" UA-DF2-F	Architectural	R1-GLULAM	2,171	2,171	2,171
1	B1-23	1	10 1/4"	21 1/2"	24'-0"	NA	3/4" UA-DF2-F	Architectural	R1-GLULAM	1,440	1,440	1,440
1	B1-24	1	10 1/4"	21 1/2"	28'-0"	NA	3/4" UA-DF2-F	Architectural	R1-GLULAM	1,680	1,680	1,680
1	B1-25	1	10 1/4"	21 1/2"	23'-8 1/4"	NA	3/4" UA-DF2-F	Architectural	R1-GLULAM	1,420	1,420	1,420
1	B1-26	1	10 1/4"	21 1/2"	17'-11 7/8"	NA	3/4" UA-DF2-F	Architectural	R1-GLULAM	1,075	1,075	1,075
1	B1-27	1	10 1/4"	21 1/2"	13'-9 1/8"	NA	3/4" UA-DF2-F	Architectural	R1-GLULAM	825	825	825
1	B1-28	1	10 1/4"	21 1/2"	25'-11 7/8"	NA	3/4" UA-DF2-F	Architectural	R1-GLULAM	1,555	1,555	1,555
1	B1-29	1	10 1/4"	21 1/2"	22'-9 1/8"	NA	3/4" UA-DF2-F	Architectural	R1-GLULAM	1,365	1,365	1,365
1	B1-30	1	10 1/4"	21 1/2"	28'-0"	NA	3/4" UA-DF2-F	Architectural	R1-GLULAM	1,680	1,680	1,680
1	B1-31	1	10 1/4"	21 1/2"	28'-0"	NA	3/4" UA-DF2-F	Architectural	R1-GLULAM	1,680	1,680	1,680
1	B1-32	1	10 1/4"	21 1/2"	27'-11 3/8"	NA	3/4" UA-DF2-F	Architectural	R1-GLULAM	1,677	1,677	1,677
1	B1-33	1	10 1/4"	21 1/2"	28'-0"	NA	3/4" UA-DF2-F	Architectural	R1-GLULAM	1,680	1,680	1,680
1	B1-34	1	10 1/4"	21 1/2"	28'-0"	NA	3/4" UA-DF2-F	Architectural	R1-GLULAM	1,680	1,680	1,680
1	B1-35	1	10 1/4"	21 1/2"	28'-0"	NA	3/4" UA-DF2-F	Architectural	R1-GLULAM	1,680	1,680	1,680
1	B1-36	1	10 1/4"	21 1/2"	28'-0"	NA	3/4" UA-DF2-F	Architectural	R1-GLULAM	1,680	1,680	1,680
1	B1-37	1	10 1/4"	21 1/2"	28'-0"	NA	3/4" UA-DF2-F	Architectural	R1-GLULAM	1,680	1,680	1,680
1	B1-38	1	10 1/4"	21 1/2"	28'-0"	NA	3/4" UA-DF2-F	Architectural	R1-GLULAM	1,680	1,680	1,680
1	B1-39	1	10 1/4"	21 1/2"	28'-0"	NA	3/4" UA-DF2-F	Architectural	R1-GLULAM	1,680	1,680	1,680
1	B1-40	1	10 1/4"	21 1/2"	28'-0"	NA	3/4" UA-DF2-F	Architectural	R1-GLULAM	1,680	1,680	1,680
1	B1-41	1	10 1/4"	21 1/2"	28'-0"	NA	3/4" UA-DF2-F	Architectural	R1-GLULAM	1,680	1,680	1,680
1	B1-42	1	10 1/4"	21 1/2"	28'-0"	NA	3/4" UA-DF2-F	Architectural	R1-GLULAM	1,680	1,680	1,680
1	B1-43	1	10 1/4"	21 1/2"	28'-0"	NA	3/4" UA-DF2-F	Architectural	R1-GLULAM	1,680	1,680	1,680
1	B1-44	1	10 1/4"	21 1/2"	28'-0"	NA	3/4" UA-DF2-F	Architectural	R1-GLULAM	1,680	1,680	1,680
1	B1-45	1	10 1/4"	21 1/2"	28'-0"	NA	3/4" UA-DF2-F	Architectural	R1-GLULAM	1,680	1,680	1,680
1	B1-46	1	10 1/4"	21 1/2"	28'-0"	NA	3/4" UA-DF2-F	Architectural	R1-GLULAM	1,680	1,680	1,680
1	B1-47	1	10 1/4"	21 1/2"	28'-0"	NA	3/4" UA-DF2-F	Architectural	R1-GLULAM	1,680	1,680	1,680
1	B1-48	1	10 1/4"	21 1/2"	28'-0"	NA	3/4" UA-DF2-F	Architectural	R1-GLULAM	1,680	1,680	1,680
1	B2-1	1	10 1/4"	21 1/2"	28'-0"	NA	3/4" UA-DF2-F	Architectural	R1-GLULAM	1,680	1,680	1,680
1	B2-2	1	10 1/4"	21 1/2"	28'-0"	NA	3/4" UA-DF2-F	Architectural	R1-GLULAM	1,680	1,680	1,680
1	B2-3	1	10 1/4"	21 1/2"	28'-0"	NA	3/4" UA-DF2-F	Architectural	R1-GLULAM	1,680	1,680	1,680
1	B2-4	1	10 1/4"	21 1/2"	28'-0"	NA	3/4" UA-DF2-F	Architectural	R1-GLULAM	1,680	1,680	1,680
1	B2-5	1	10 1/4"	21 1/2"	28'-0"	NA	3/4" UA-DF2-F	Architectural	R1-GLULAM	1,680	1,680	1,680
1	B2-6	1	10 1/4"	21 1/2"	28'-0"	NA	3/4" UA-DF2-F	Architectural	R1-GLULAM	1,680	1,680	1,680
1	B2-7	1	10 1/4"	21 1/2"	28'-0"	NA	3/4" UA-DF2-F	Architectural	R1-GLULAM	1,680	1,680	1,680
1	B2-8	1	10 1/4"	21 1/2"	28'-0"	NA	3/4" UA-DF2-F	Architectural	R1-GLULAM	1,680	1,680	1,680
1	B2-9	1	10 1/4"	21 1/2"	28'-0"	NA	3/4" UA-DF2-F	Architectural	R1-GLULAM	1,680	1,680	1,680
1	B2-10	1	10 1/4"	21 1/2"	28'-0"	NA	3/4" UA-DF2-F	Architectural	R1-GLULAM	1,680	1,680	1,680
1	B2-11	1	10 1/4"	21 1/2"	28'-0"	NA	3/4" UA-DF2-F	Architectural	R1-GLULAM	1,680	1,680	1,680
1	B2-12	1	10 1/4"	21 1/2"	28'-0"	NA	3/4" UA-DF2-F	Architectural	R1-GLULAM	1,680	1,680	1,680
1	B2-13	1	10 1/4"	21 1/2"	28'-0"	NA	3/4" UA-DF2-F	Architectural	R1-GLULAM	1,680	1,680	1,680
1	B2-14	1	10 1/4"	21 1/2"	28'-0"	NA	3/4" UA-DF2-F	Architectural	R1-GLULAM	1,680	1,680	1,680
1	B2-15	1	10 1/4"	21 1/2"	28'-0"	NA	3/4" UA-DF2-F	Architectural	R1-GLULAM	1,680	1,680	1,680
1	B2-16	1	10 1/4"	21 1/2"	28'-0"	NA	3/4" UA-DF2-F	Architectural	R1-GLULAM	1,680	1,680	1,680
1	B2-17	1	10 1/4"	21 1/2"	28'-0"	NA	3/4" UA-DF2-F	Architectural	R1-GLULAM	1,680	1,680	1,680
1	B2-18	1	10 1/4"	21 1/2"	28'-0"	NA	3/4" UA-DF2-F	Architectural	R1-GLULAM	1,680	1,680	1,680
1	B2-19	1	10 1/4"	21 1/2"	28'-0"	NA	3/4" UA-DF2-F	Architectural	R1-GLULAM	1,680	1,680	1,680
1	B2-20	1	10 1/4"	21 1/2"	28'-0"	NA	3/4" UA-DF2-F	Architectural	R1-GLULAM	1,680	1,680	1,680
1	B2-21	1	10 1/4"	21 1/2"	28'-0"	NA	3/4" UA-DF2-F	Architectural	R1-GLULAM	1,680	1,680	1,680
1	B2-22	1	10 1/4"	21 1/2"	28'-0"	NA	3/4" UA-DF2-F	Architectural	R1-GLULAM	1,680	1,680	1,680
1	B2-23	1	10 1/4"	21 1/2"	28'-0"	NA	3/4" UA-DF2-F	Architectural	R1-GLULAM	1,680	1,680	1,680
1	B2-24	1	10 1/4"	21 1/2"	28'-0"	NA	3/4" UA-DF2-F	Architectural	R1-GLULAM	1,680	1,680	1,680
1	B2-25	1	10 1/4"	21 1/2"	28'-0"	NA	3/4" UA-DF2-F	Architectural	R1-GLULAM	1,680	1,680	1,680
1	B2-26	1	10 1/4"	21 1/2"	28'-0"	NA	3/4" UA-DF2-F	Architectural	R1-GLULAM	1,680	1,680	1,680
1	B2-27	1	10 1/4"	21 1/2"	28'-0"	NA	3/4" UA-DF2-F	Architectural	R1-GLULAM	1,680	1,680	1,680
1	B2-28	1	10 1/4"	21 1/2"	28'-0"	NA	3/4" UA-DF2-F	Architectural	R1-GLULAM	1,680	1,680	1,680
1	B2-29	1	10 1/4"	21 1/2"	28'-0"	NA	3/4" UA-DF2-F	Architectural	R1-GLULAM	1,680	1,680	1,680
1	B2-30	1	10 1/4"	21 1/2"	28'-0"	NA	3/4" UA-DF2-F	Architectural	R1-GLULAM	1,680	1,680	1,680
1	B2-31	1	10 1/4"	21 1/2"	28'-0"	NA	3/4" UA-DF2-F	Architectural	R1-GLULAM	1,680	1,680	1,680
1	B2-32	1	10 1/4"	21 1/2"	28'-0"	NA	3/4" UA-DF2-F	Architectural	R1-GLULAM	1,680	1,680	1,680
1	B2-33	1	10 1/4"	21 1/2"	28'-0"	NA	3/4" UA-DF2-F	Architectural	R1-GLULAM	1,680	1,680	1,680
1	B2-34	1	10 1/4"	21 1/2"	28'-0"	NA	3/4" UA-DF2-F	Architectural	R1-GLULAM	1,680	1,680	1,680
1	B2-35	1	10 1/4"	21 1/2"	28'-0"	NA	3/4" UA-DF2-F	Architectural	R1-GLULAM	1,680	1,680	1,680
1	B2-36	1	10 1/4"	21 1/2"	28'-0"	NA	3/4" UA-DF2-F	Architectural	R1-GLULAM	1,680	1,680	1,680
1	B2-37	1	10 1/4"	21 1/2"	28'-0"	NA	3/4" UA-DF2-F	Architectural	R1-GLULAM	1,680	1,680	1,680
1	B2-38	1	10 1/4"	21 1/2"	28'-0"	NA	3/4" UA-DF2-F	Architectural	R1-GLULAM	1,680	1,680	1,680
1	B2-39	1	10 1/4"	21 1/2"	28'-0"	NA	3/4" UA-DF2-F	Architectural	R1-GLULAM	1,680	1,680	1,680
1	B2-40	1	10 1/4"	21 1/2"	28'-0"	NA	3/4" UA-DF2-F	Architectural	R1-GLULAM	1,680	1,680	1,680
1	B2-41	1	10 1/4"	21 1/2"	28'-0"	NA	3/4" UA-DF2-F	Architectural	R1-GLULAM	1,680	1,680	1,680
1	B2-42	1	10 1/4"	21 1/2"	28'-0"	NA	3/4" UA-DF2-F	Architectural	R1-GLULAM	1,680	1,680	1,680
1	B2-43	1	10 1/4"	21 1/2"	28'-0"	NA	3/4" UA-DF2-F	Architectural	R1-GLULAM	1,680	1,680	1,680
1	B2-44	1	10 1/4"	21 1/2"	28'-0"	NA	3/4" UA-DF2-F	Architectural	R1-GLULAM	1,680	1,680	1,680
1	B2-45	1	10 1/4"	21 1/2"	28'-0"	NA	3/4" UA-DF2-F	Architectural	R1-GLULAM	1,680	1,680	1,680
1	B2-46	1	10 1/4"	21 1/2"	28'-0"	NA	3/4" UA-DF2-F	Architectural	R1-GLULAM	1,680	1,680	1,680
1	B2-47	1	10 1/4"	21 1/2"	28'-0"	NA	3/4" UA-DF2-F	Architectural	R1-GLULAM	1,680	1,680	1,680
1	B2-48	1	10 1/4"	21 1/2"	28'-0"	NA	3/4" UA-DF2-F	Architectural	R1-GLULAM	1,680	1,680	1,680
1	B3-1	1	10 1/4"	21 1/2"	28'-0"	NA	3/4" UA-DF2-F	Architectural	R1-GLULAM	1,680	1,680	1,680
1	B3-2	1	10 1/4"	21 1/2"	28'-0"	NA	3/4" UA-DF2-F	Architectural	R1-GLULAM	1,680	1,680	1,680
1	B3-3	1	10 1/4"	21 1/2"	28'-0"	NA	3/4" UA-DF2-F	Architectural	R1-GLULAM	1,680	1,680	1,680
1	B3-4	1	10 1/4"	21 1/2"	28'-0"	NA	3/4" UA-DF2-F	Architectural	R1-GLULAM	1,680	1,680	1,680
1	B3-5	1	10 1/4"	21 1/2"	28'-0"	NA	3/4" UA-DF2-F	Architectural	R1-GLULAM	1,680	1,680	1,680
1	B3-6	1	10 1/4"	21 1/2"	28'-0"	NA	3/4" UA-DF2-F	Architectural	R1-GLULAM	1,680	1,680	1,680
1	B3-7	1	10 1/4"	21 1/2"	28'-0"	NA	3/4" UA-DF2-F	Architectural	R1-GLULAM	1,680	1,680	1,680
1	B3-8	1	10 1/4"	21 1/2"	28'-0"	NA	3/4" UA-DF2-F	Architectural	R1-GLULAM	1,680	1,680	1,680
1	B3-9	1	10 1/4"	21 1/2"	28'-0"	NA	3/4" UA-DF2-F	Architectural	R1-GLULAM	1,680	1,680	1,680
1	B3-10	1	10 1/4"	21 1/2"	28'-0"	NA	3/4" UA-DF2-F	Architectural	R1-GLULAM	1,680	1,680	1,680
1	B3-11	1	10 1/4"	21 1/2"	28'-0"	NA	3/4" UA-DF2-F	Architectural	R1-GLULAM	1,680	1,680	1,680
1	B3-12	1	10 1/4"	21 1/2"	28'-0"	NA	3/4" UA-DF2-F	Architectural	R1-GLULAM	1,680	1,680	1,680
1	B3-13	1	10 1/4"	21 1/2"	28'-0"	NA	3/4" UA-DF2-F	Architectural	R1-GLULAM	1,680	1,680	1,680
1	B3-14	1	10 1/4"	21 1/2"	28'-0"	NA	3/4" UA-DF2-F	Architectural	R1-GLULAM	1,680	1,680	1,680
1	B3-15	1	10 1/4"	21 1/2"	28'-0"	NA	3/4" UA-DF2-F	Architectural	R1-GLULAM	1,680	1,680	1,680
1	B3-16	1	10 1/4"	21 1/2"	28'-0"	NA	3/4" UA-DF2-F	Architectural	R1-GLULAM	1,680	1,680	1,680
1	B3-17	1	10 1/4"	21 1/2"	28'-0"	NA	3/4" UA-DF2-F	Architectural	R1-GLULAM	1,680	1,680	1,680
1	B3-18	1	10 1/4"	21 1/2"	28'-0"	NA	3/4" UA-DF2-F	Architectural	R1-GLULAM	1,680	1,680	1,680
1	B3-19	1	10 1/4"	21 1/2"	28'-0"	NA	3/4" UA-DF2-F	Architectural	R1-GLULAM	1,680	1,680	1,680
1	B3-20	1	10 1/4"	21 1/2"	28'-0"	NA	3/4" UA-DF2-F	Architectural	R1-GLULAM	1,680	1,680	1,680
1	B3-21	1	10 1/4"	21 1/2"	28'-0"	NA	3/4" UA-DF2-F	Architectural	R1-GLULAM	1,680	1,680	1,680
1	B3-22	1	10 1/4"	21 1/2"	28'-0"	NA	3/4" UA-DF2-F	Architectural	R1-GLULAM	1,680	1,680	1,680
1	B3-23	1	10 1/4"	21 1/2"	28'-0"	NA	3/4" UA-DF2-F	Architectural	R1-GLULAM	1,680	1,680	1,680
1	B3-24	1	10 1/4"	21 1/2"	28'-0"	NA	3/4" UA-DF2-F	Architectural	R1-GLULAM	1,680	1,680	1,680
1	B3-25	1	10 1/4"	21 1/2"	28'-0"	NA	3/4" UA-DF2-F	Architectural	R1-GLULAM	1,680	1,680	1,680
1	B3-26	1	10 1/4"	21 1/2"	28'-0"	NA	3/4" UA-DF2-F	Architectural	R1-GLULAM	1,680	1,680	1,680
1	B3-27	1	10 1/4"	21 1/2"	28'-0"	NA	3/4" UA-DF2-F	Architectural	R1-GLULAM	1,680	1,680	1,680
1	B3-28	1	10 1/4"	21 1/2"	28'-0"	NA	3/4" UA-DF2-F	Architectural	R1-GLULAM	1,680	1,680	1,680
1	B3-29	1	10 1/4"	21 1/2"	28'-0"	NA	3/4" UA-DF2-F	Architectural	R1-GLULAM	1,680	1,680	1,680
1	B3-30	1	10 1/4"	21 1/2"	28'-0"	NA	3/4" UA-DF2-F	Architectural	R1-GLULAM	1,680	1,680	1,680
1	B3-31	1	10 1/4"	21 1/2"	28'-0"	NA	3/4" UA-DF2-F	Architectural	R1-GLULAM	1,680	1,680	1,680
1	B3-32	1	10 1/4"	21 1/2"	28'-0"	NA	3/4" UA-DF2-F	Architectural	R1-GLULAM	1,680	1,680	1,680
1	B3-33	1	10 1/4"	21 1/2"	28'-0"	NA	3/4" UA-DF2-F	Architectural	R1-GLULAM	1,680	1,680	1,680
1	B3-34	1	10 1/4"	21 1/2"	28'-0"	NA	3/4" UA-DF2-F	Architectural	R1-GLULAM	1,680	1,680	1,680
1	B3-35	1	10 1/4"	21 1/2"	28'-0"	NA	3/4" UA-DF2-F	Architectural	R1-GLULAM	1,680	1,680	1,680
1	B3-36	1	10 1/4"	21 1/2"	28'-0"	NA	3/4" UA-DF2-F	Architectural	R1-GLULAM	1,680	1,680	1,680
1	B3-37	1	10 1/4"	21 1/2"	28'-0"	NA	3/4" UA-DF2-F	Architectural	R1-GLULAM	1,680	1,680	1,680
1	B3-38	1	10 1/4"	21 1/2"	28'-0"	NA	3/4" UA-DF2-F	Architectural	R1-GLULAM	1,680	1,680	1,680
1	B3-39	1	10 1/4"	21 1/2"	28'-0"	NA	3/4" UA-DF2-F	Architectural	R1-GLULAM	1,680	1,680	1,680
1	B3-40	1	10 1/4"	21 1/2"	28'-0"	NA	3/4" UA-DF2-F	Architectural	R1-GLULAM	1,680	1,680	1,680
1	B3-41	1	10 1/4"	21 1/2"	28'-0"	NA	3/4" UA-DF2-F	Architectural	R1-GLULAM	1,680	1,680	1,680
1	B3-42	1	10 1/4"	21 1/2"	28'-0"	NA	3/4" UA-DF2-F	Architectural	R1-GLULAM	1,680	1,680	1,680
1	B3-43	1	10 1/4"	21 1/2"	28'-0"	NA	3/4" UA-DF2-F	Architectural	R1-GLULAM	1,680	1,680	1,680
1	B3-44	1	10 1/4"	21 1/2"	28'-0"	NA	3/4" UA-DF2-F	Architectural	R1-GLULAM	1,680	1,680	1,680
1	B3-45	1	10 1/4"	21 1/2"	28'-0"	NA	3/4" UA-DF2-F	Architectural	R1-GLULAM	1,680	1,680	1,680
1	B3-46	1	10 1/4"	21 1/2"	28'-0"	NA	3/4" UA-DF2-F	Architectural	R1-GLULAM	1,680	1,680	1,680
1	B3-47	1	10 1/4"	21 1/2"	28'-0"	NA	3/4" UA-DF2-F	Architectural	R1-GLULAM	1,680	1,680	1,680
1	B3-48	1	10 1/4"	21 1/2"	28'-0"	NA	3/4" UA-DF2-F	Architectural	R1-GLULAM	1,680	1,680	1,680

LEVEL 5 FRAMING PLAN

U/S OF CLT = EL+ 63- 3 7/8" (U.N.O.)

DETAIL 23
TYPICAL SIDE PLATE FIELD WELDING DETAIL

REV	DATE	REMARKS
1	12/31/2020	SMTC IFF layout revisions
0	04/30/2020	IFF
L	03/04/2020	Area B OFA
K	02/05/2020	Area B OFA
J	01/17/2020	Area A OFA glulam
I	12/11/2019	Area A OFA
H	11/18/2019	Area B Geo.
G	11/15/2019	Area B Geo.

Ref Dwg: S104

ISSUED SMTC IFF layo

DATE: 12/31/2020

STRUCTURLAM
MASS TIMBER CORPORATION
Intelligence In Wood

DATE	18/Jul/2019	SHEET	REV.	PROJECT
BY	CMI	SL10	1	BORREGAS
DWG TITLE	LEVEL 5 FRAMING PLAN			Job# 25991

SEE SL41 FOR CLT PANEL SCHEDULE

CLT SCHEDULE

PANEL	PLAN	QTY	PLY	GRADE	WIDTH	LENGTH	AREA	VOLUME
245 VD-1	FP5-201	1	3 5/8"	9'-6 5/16"	37'-1 1/16"	8119	8119	
245 VD-1	FP5-202	1	3 5/8"	7'-11 1/2"	37'-5 1/8"	8239	8239	
245 VD-1	FP5-204	1	3 5/8"	0'-7 7/16"	37'-5 1/8"	2544	2544	
245 VD-1	FP5-206	1	3 5/8"	3'-1 1/2"	2'-6 9/16"	264	265	
245 VD-1	FP5-207	1	3 5/8"	9'-0"	37'-5 1/8"	8554	8554	
245 VD-1	FP5-208	1	3 5/8"	9'-0"	2'-6 9/16"	764	764	
245 VD-1	FP5-210	1	3 5/8"	9'-0"	37'-1 1/16"	7303	7303	
245 VD-1	FP5-213	1	3 5/8"	9'-0"	27'-2"	6412	6412	
245 VD-1	FP5-216	1	3 5/8"	9'-0"	37'-1 1/16"	7380	7380	
245 VD-1	FP5-220	1	3 5/8"	9'-0"	37'-1 1/16"	8707	8707	
245 VD-1	FP5-223	1	3 5/8"	4'-7 1/2"	37'-1 1/16"	4158	4158	
245 VD-1	FP5-224	1	3 5/8"	9'-0"	37'-1 1/16"	8169	8169	
245 VD-1	FP5-226	1	3 5/8"	9'-0"	37'-4 1/8"	7246	7246	
245 VD-1	FP5-228	1	3 5/8"	9'-0"	37'-5 15/16"	7311	7311	
245 VD-1	FP5-233	1	3 5/8"	9'-0"	37'-1 1/16"	8212	8212	
245 VD-1	FP5-236	1	3 5/8"	9'-0"	27'-8 1/8"	6303	6303	
245 VD-1	FP5-238	1	3 5/8"	9'-0"	27'-8 1/8"	6327	6327	
245 VD-1	FP5-246	1	3 5/8"	9'-0"	37'-1 1/16"	7802	7802	
245 VD-1	FP5-247	1	3 5/8"	9'-0"	3'-6 15/16"	793	793	
245 VD-1	FP5-250	1	3 5/8"	0'-8 11/16"	5'-8 11/16"	152	152	
245 VD-1	FP5-251	1	3 5/8"	7'-1 1/2"	27'-8 1/8"	5043	5043	
245 VD-1	FP5-253	1	3 5/8"	9'-6 3/16"	37'-1 1/16"	8121	8121	
245 VD-1	FP5-255	1	3 5/8"	4'-7 1/2"	37'-1 1/16"	4158	4159	
245 VD-1	FP5-271	1	3 5/8"	9'-0"	27'-2"	6414	6414	
245 VD-1	FP5-272	1	3 5/8"	9'-0"	27'-8 1/8"	6504	6504	
245 VD-1	FP5-273	1	3 5/8"	0'-5 1/16"	3'-9"	157	157	
245 VD-1	FP5-274	1	3 5/8"	0'-7 7/16"	27'-8 1/8"	2546	2546	
245 VD-1	FP5-275	1	3 5/8"	4'-7 7/16"	37'-1 1/16"	4158	4158	
245 VD-1	FP5-279	1	3 5/8"	9'-0"	27'-2"	6412	6412	
245 VD-1	FP5-280	1	3 5/8"	9'-0"	37'-1 1/16"	8706	8706	
245 VD-1	FP5-281	1	3 5/8"	9'-0"	37'-1 1/16"	8706	8706	
245 VD-1	FP5-282	1	3 5/8"	9'-0"	37'-1 1/16"	8705	8705	
245 VD-1	FP5-283	1	3 5/8"	4'-7 1/2"	37'-1 1/16"	4158	4159	
245 VD-1	FP5-284	1	3 5/8"	9'-0"	27'-2"	6414	6414	
245 VD-1	FP5-300	1	3 5/8"	9'-6 3/16"	36'-11 13/16"	8142	8142	
245 VD-1	FP5-202	1	3 5/8"	7'-7 7/16"	27'-8 5/8"	4243	4243	
245 VD-1	FP5-205	1	3 5/8"	2'-1 1/2"	30'-6 7/16"	3002	3002	
245 VD-1	FP5-209	1	3 5/8"	9'-0"	30'-6 7/16"	6233	6233	
245 VD-1	FP5-211	1	3 5/8"	9'-0"	30'-6 7/16"	5729	5729	
245 VD-1	FP5-212	1	3 5/8"	6'-10 1/8"	26'-4"	5060	5060	
245 VD-1	FP5-214	1	3 5/8"	9'-0"	20'-10 1/2"	4638	4638	
245 VD-1	FP5-215	1	3 5/8"	8'-3 7/16"	26'-4"	5071	5071	
245 VD-1	FP5-217	1	3 5/8"	0'-7 7/16"	26'-4"	3796	3796	
245 VD-1	FP5-217	1	3 5/8"	0'-10 15/16"	26'-4"	4566	4566	
245 VD-1	FP5-218	1	3 5/8"	9'-0"	30'-6 7/16"	6882	6882	
245 VD-1	FP5-221	1	3 5/8"	9'-0"	30'-6 7/16"	6185	6185	
245 VD-1	FP5-222	1	3 5/8"	4'-7 1/2"	30'-6 7/16"	4052	4052	
245 VD-1	FP5-225	1	3 5/8"	9'-0"	20'-6 15/16"	4633	4633	
245 VD-1	FP5-227	1	3 5/8"	9'-0"	17'-9 3/8"	2739	2739	
245 VD-1	FP5-229	1	3 5/8"	9'-0"	20'-6 15/16"	5813	5813	
245 VD-1	FP5-230	1	3 5/8"	9'-0"	20'-6 15/16"	6000	6000	
245 VD-1	FP5-231	1	3 5/8"	9'-0"	37'-5 1/16"	7516	7516	
245 VD-1	FP5-232	1	3 5/8"	4'-7 1/2"	37'-5 1/16"	4162	4162	
245 VD-1	FP5-234	1	3 5/8"	9'-0"	40'-0"	8246	8246	
245 VD-1	FP5-235	1	3 5/8"	9'-0"	40'-0"	8919	8919	
245 VD-1	FP5-237	1	3 5/8"	0'-2 15/16"	26'-8 3/4"	3566	3566	
245 VD-1	FP5-239	1	3 5/8"	9'-0"	27'-2 7/16"	4844	4844	
245 VD-1	FP5-240	1	3 5/8"	0'-11 9/16"	26'-8 11/16"	3896	3896	
245 VD-1	FP5-241	1	3 5/8"	0'-7 5/16"	26'-4"	3792	3792	
245 VD-1	FP5-242	1	3 5/8"	9'-0"	20'-10 1/2"	4633	4633	
245 VD-1	FP5-243	1	3 5/8"	8'-3 7/16"	26'-4"	5071	5071	
245 VD-1	FP5-244	1	3 5/8"	6'-7 15/16"	26'-4"	3789	3789	
245 VD-1	FP5-245	1	3 5/8"	9'-0"	30'-6 7/16"	6764	6764	
245 VD-1	FP5-248	1	3 5/8"	9'-0"	30'-6 7/16"	6208	6208	
245 VD-1	FP5-249	1	3 5/8"	9'-0"	30'-6 7/16"	2533	2533	
245 VD-1	FP5-252	1	3 5/8"	9'-0"	27'-9 5/8"	3757	3757	
245 VD-1	FP5-254	1	3 5/8"	9'-6 3/16"	36'-11 13/16"	8142	8142	
245 VD-1	FP5-256	1	3 5/8"	4'-7 1/2"	20'-6 15/16"	2796	2796	
245 VD-1	FP5-257	1	3 5/8"	4'-7 1/2"	30'-6 7/16"	4327	4327	
245 VD-1	FP5-270	1	3 5/8"	0'-11 9/16"	12'-11 13/16"	833	833	
245 VD-1	FP5-276	1	3 5/8"	9'-0"	20'-10 1/2"	4638	4638	
245 VD-1	FP5-277	1	3 5/8"	9'-0"	30'-6 7/16"	6184	6184	
245 VD-1	FP5-278	1	3 5/8"	9'-0"	20'-10 1/2"	4638	4638	
							401879	

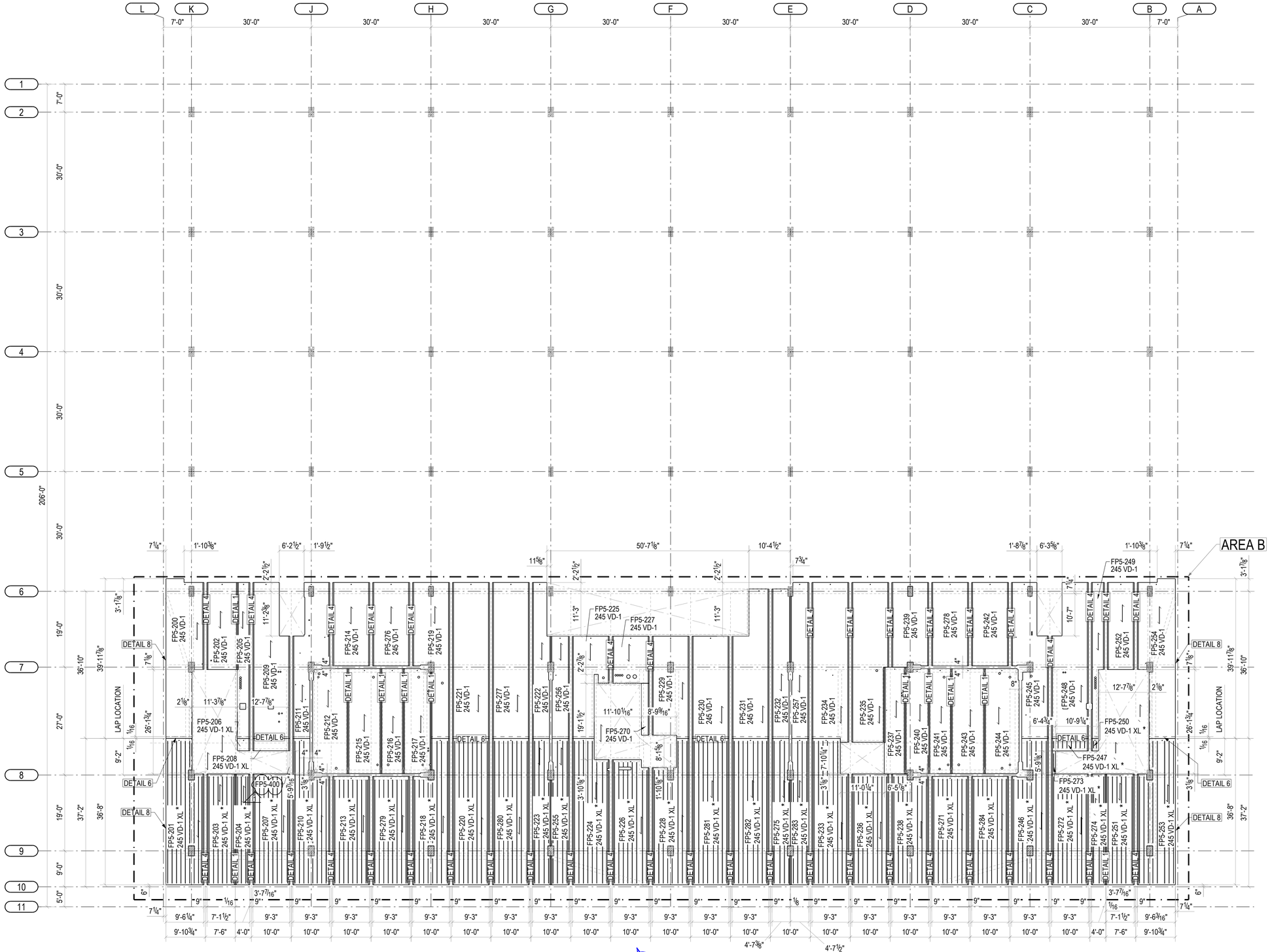

***WORK THIS SHEET WITH SL37

NOTES:
1. * - DENOTES COMPOSITE CLT PANEL SECTION SEE SL24
2. - DENOTES CHANGE IN TYPICAL CLT TO GLULAM FIXING INTO 6" SPACING

LEVEL 5 CLT PLAN

U/S OF CLT = EL. + 63'-3 7/8" (U.N.O.)

REV	DATE	REMARKS
1	12/31/2020	SMTC IFF layout revisions
L	03/04/2020	Area B OFA
K	02/05/2020	Area B OFA
J	01/17/2020	Area A OFA glulam
I	12/11/2019	Area A OFA
H	11/18/2019	Area B Geo.
G	11/15/2019	Area B Geo.
F	10/22/2019	Area B Geo.

Ref Dwg: S104

ISSUED SMTC IFF layo

DATE: 12/31/2020

STRUCTURLAM
MASS TIMBER CORPORATION
Intelligence In Wood

DATE 18/Jul/2019	SHEET	REV.	PROJECT
BY CMI	SL11	1	BORREGAS
DWG TITLE LEVEL 5 CLT PLAN			Job# 25991

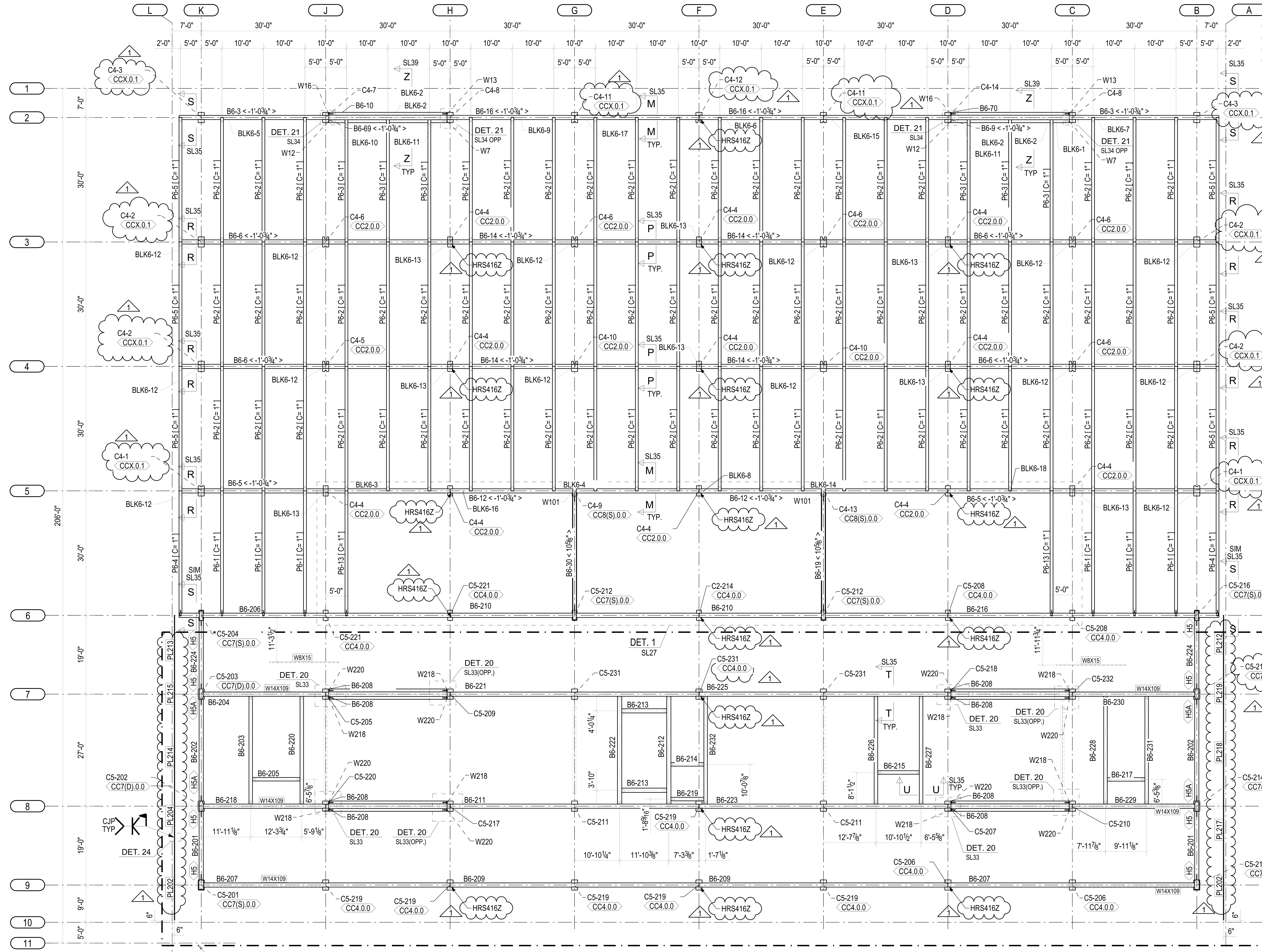

ROOF FRAMING PLAN
U/S OF CLT = EL+ 78- 9 7/8" (U.N.O.)

NOTES:
CC1,CC2,CC3,CC3(X),CC4,CC9, CCX SEE SL30 .
CC5(D), CC5(S), CC6(D) SEE SL31 .
CC7(D), CC7(S), CC8(S) SEE SL32 .

***WORK THIS SHEET WITH SL23 & SL25
SL33, SL34 & SL35

NOTES:

1. BX-X <±...>
 - BEAM MARK
 - DROP FROM U/S OF CLT ELEVATION

2. C -DENOTES CAMBER

3. GLULAM BEAMS ARE DROP BY ¾" BELOW U/S OF CLT, UNLESS OTHERWISE NOTED

4. CX-XX
CCX.X.X
 - COLUMN BOTTOM LEVEL
 - COLUMN MARK
 - COLUMN CONNECTION TYPE (SEE COLUMN CONNECTION TYPE LEGEND)

COLUMN CONNECTION TYPE LEGEND:

1. CCX.0.0
 - PERIMETER CONDITION:
 0 = NO (TYPICAL)
 1 = YES, SEE 2 / S401
 - FIRE RATING CONDITION:
 0 = TYPICAL
 1 = EXTRA FIRE RATED
 - COLUMN CONNECTION TYPE NUMBER AS PER TYPICAL DETAILS

6/401 REMOVED

IN ADDITION:
2. CCX(S).0.0
 - PURLIN TO COLUMN CONNECTION (WHEN APPLICABLE):
 S = SINGLE PURLIN, 1 SIDE ONLY, N/S DIR
 D = DOUBLE PURLIN, 1 EACH SIDE OF COL, N/S DIR

OR
3. CCX/0.0.0
 - ADJACENT SIDE CONNECTION (WHEN APPLICABLE):
 0 = NO ADJACENT END CONNECTION TYPE
 1 = ADJACENT END CONNECTION TYPE
 - TYPICAL COLUMN CONNECTION TYPE (SINGLE SIDE ONLY)

GLULAM SCHEDULE

TYPE	PROD No.	QTY	WIDTH	DEPTH	LENGTH	CAMBER	STRESS GRADE	FINISH	STATUS	WEIGHT (LB)	TOTAL WEIGHT
B	B6-3	2	12 1/4"	26 3/4"	35'-3 3/4"	N/A	24F-V8-DF/DF	Architectural	IFF RELEASED	2552	5105
B	B6-5	2	12 1/4"	25 1/4"	65'-4"	N/A	24F-V8-DF/DF	Architectural	IFF RELEASED	4466	8931
B	B6-6	4	12 1/4"	25 1/4"	65'-4"	N/A	24F-V8-DF/DF	Architectural	IFF RELEASED	4464	17855
B	B6-9	1	8 1/4"	26 3/4"	28'-6"	N/A	24F-V4+2 FACE	Architectural	IFF RELEASED	1388	1388
B	B6-10	1	8 1/4"	38 3/4"	28'-6"	N/A	24F-V4+2 FACE	Architectural	IFF RELEASED	2012	2012
B	B6-12	2	12 1/4"	25 1/4"	59'-11 3/4"	N/A	24F-V8-DF/DF	Architectural	IFF RELEASED	4104	8208
B	B6-14	4	12 1/4"	25 1/4"	59'-11 3/4"	N/A	24F-V8-DF/DF	Architectural	IFF RELEASED	4102	16408
B	B6-16	2	12 1/4"	26 3/4"	59'-11 5/8"	N/A	24F-V8-DF/DF	Architectural	IFF RELEASED	4340	8681
B	B6-19	1	12 1/4"	31 1/4"	27'-6"	N/A	24F-V4-DF/DF	Architectural	IFF RELEASED	2248	2248
B	B6-30	1	12 1/4"	31 1/4"	27'-6"	N/A	24F-V4-DF/DF	Architectural	IFF RELEASED	2248	2248
B	B6-69	1	8 1/4"	26 3/4"	28'-6"	N/A	24F-V4+2 FACE	Architectural	IFF RELEASED	1388	1388
B	B6-70	1	8 1/4"	38 3/4"	28'-6"	N/A	24F-V4+2 FACE	Architectural	IFF RELEASED	2012	2012
B	B6-201	2	12 1/4"	28 1/4"	16'-6"	N/A	24F-V4-DF/DF	Architectural	IFF RELEASED	1240	2480
B	B6-202	2	12 1/4"	28 1/4"	24'-6"	N/A	24F-V4-DF/DF	Architectural	IFF RELEASED	1854	3708
B	B6-203	1	10 1/4"	25 1/4"	25'-11 9/16"	N/A	24F-V4-DF/DF	Architectural	IFF RELEASED	1489	1489
B	B6-204	1	12 1/4"	31 1/4"	29'-11 3/16"	N/A	24F-V4-DF/DF	Architectural	IFF RELEASED	2535	2535
B	B6-205	1	10 1/4"	25 1/4"	11'-5 5/16"	N/A	24F-V4-DF/DF	Architectural	IFF RELEASED	655	655
B	B6-206	1	12 1/4"	31 1/4"	65'-4"	N/A	24F-V8-DF/DF	Architectural	IFF RELEASED	5529	5529
B	B6-207	2	12 1/4"	31 1/4"	59'-11 1/2"	N/A	24F-V8-DF/DF	Architectural	IFF RELEASED	5077	10154
B	B6-208	8	8 1/4"	31 1/4"	28'-6"	N/A	24F-V4+2 FACE	Architectural	IFF RELEASED	1623	12984
B	B6-209	2	12 1/4"	31 1/4"	59'-11 3/4"	N/A	24F-V8-DF/DF	Architectural	IFF RELEASED	5080	10159
B	B6-210	2	12 1/4"	31 1/4"	59'-11 3/4"	N/A	24F-V8-DF/DF	Architectural	IFF RELEASED	5083	10166
B	B6-211	1	12 1/4"	31 1/4"	59'-11 1/2"	N/A	24F-V8-DF/DF	Architectural	IFF RELEASED	5078	5078
B	B6-212	1	12 1/4"	25 1/4"	25'-11 9/16"	N/A	24F-V4-DF/DF	Architectural	IFF RELEASED	1782	1782
B	B6-213	2	12 1/4"	25 1/4"	10'-9 15/16"	N/A	24F-V4-DF/DF	Architectural	IFF RELEASED	742	1484
B	B6-214	1	10 1/4"	25 1/4"	7'-11 1/16"	N/A	24F-V4-DF/DF	Architectural	IFF RELEASED	453	453
B	B6-215	1	10 1/4"	25 1/4"	10'-0 1/16"	N/A	24F-V4-DF/DF	Architectural	IFF RELEASED	572	572
B	B6-216	1	12 1/4"	31 1/4"	65'-4"	N/A	24F-V8-DF/DF	Architectural	IFF RELEASED	5529	5529
B	B6-217	1	10 1/4"	25 1/4"	9'-0 11/16"	N/A	24F-V4-DF/DF	Architectural	IFF RELEASED	518	518
B	B6-218	1	12 1/4"	31 1/4"	29'-11 3/16"	N/A	24F-V4-DF/DF	Architectural	IFF RELEASED	2535	2535
B	B6-219	1	10 1/4"	25 1/4"	7'-11 1/16"	N/A	24F-V4-DF/DF	Architectural	IFF RELEASED	453	453
B	B6-220	1	10 1/4"	25 1/4"	25'-11 9/16"	N/A	24F-V4-DF/DF	Architectural	IFF RELEASED	1489	1489
B	B6-221	1	12 1/4"	31 1/4"	59'-11 1/2"	N/A	24F-V8-DF/DF	Architectural	IFF RELEASED	5078	5078
B	B6-222	1	12 1/4"	25 1/4"	25'-11 9/16"	N/A	24F-V4-DF/DF	Architectural	IFF RELEASED	1782	1782
B	B6-223	1	12 1/4"	31 1/4"	59'-11 1/2"	N/A	24F-V8-DF/DF	Architectural	IFF RELEASED	5078	5078
B	B6-224	2	12 1/4"	28 1/4"	16'-6"	N/A	24F-V4-DF/DF	Architectural	IFF RELEASED	1239	2477
B	B6-225	1	12 1/4"	31 1/4"	59'-11 1/2"	N/A	24F-V8-DF/DF	Architectural	IFF RELEASED	5078	5078
B	B6-226	1	10 1/4"	25 1/4"	25'-11 9/16"	N/A	24F-V4-DF/DF	Architectural	IFF RELEASED	1489	1489
B	B6-227	1	10 1/4"	25 1/4"	25'-11 9/16"	N/A	24F-V4-DF/DF	Architectural	IFF RELEASED	1489	1489
B	B6-228	1	10 1/4"	25 1/4"	25'-11 9/16"	N/A	24F-V4-DF/DF	Architectural	IFF RELEASED	1489	1489
B	B6-229	1	12 1/4"	31 1/4"	29'-11 3/16"	N/A	24F-V4-DF/DF	Architectural	IFF RELEASED	2535	2535
B	B6-230	1	12 1/4"	31 1/4"	29'-11 3/16"	N/A	24F-V4-DF/DF	Architectural	IFF RELEASED	2535	2535
B	B6-231	1	10 1/4"	25 1/4"	25'-11 9/16"	N/A	24F-V4-DF/DF	Architectural	IFF RELEASED	1489	1489
B	B6-232	1	10 1/4"	25 1/4"	25'-11 9/16"	N/A	24F-V4-DF/DF	Architectural	IFF RELEASED	1489	1489
B	BLK6-1	1	8 1/4"	12"	3'-10 3/4"	N/A	24F-V4-DF/DF	Architectural	IFF RELEASED	86	86
B	BLK6-2	4	8 1/4"	12"	9'-3 1/2"	N/A	24F-V4-DF/DF	Architectural	IFF RELEASED	205	820
B	BLK6-3	1	12 1/4"	12"	24'-7 5/8"	N/A	24F-V4-DF/DF	Architectural	IFF RELEASED	771	771
B	BLK6-4	1	12 1/4"	12"	29'-11 3/4"	N/A	24F-V4-DF/DF	Architectural	IFF RELEASED	930	930
B	BLK6-5	1	12 1/4"	12"	36'-1"	N/A	24F-V8-DF/DF	Architectural	IFF RELEASED	1116	1116
B	BLK6-6	1	12 1/4"	12"	29'-11 5/8"	N/A	24F-V8-DF/DF	Architectural	IFF RELEASED	934	934
B	BLK6-7	1	12 1/4"	12"	36'-1"	N/A	24F-V8-DF/DF	Architectural	IFF RELEASED	1116	1116
B	BLK6-8	1	12 1/4"	12"	29'-11 5/8"	N/A	24F-V4-DF/DF	Architectural	IFF RELEASED	929	929
B	BLK6-9	1	12 1/4"	12"	30'-8 5/8"	N/A	24F-V8-DF/DF	Architectural	IFF RELEASED	955	955
B	BLK6-10	1	8 1/4"	12"	3'-10 3/4"	N/A	24F-V4-DF/DF	Architectural	IFF RELEASED	86	86
B	BLK6-11	2	8 1/4"	12"	3'-10 3/4"	N/A	24F-V4-DF/DF	Architectural	IFF RELEASED	86	172
B	BLK6-12	14	11 1/4"	17 3/4"	1'-0"	N/A	L2D-DF/DF	Architectural	IFF RELEASED	44	622
B	BLK6-13	8	11 1/4"	14 1/4"	1'-0"	N/A	L2D-DF/DF	Architectural	IFF RELEASED	36	285
B	BLK6-14	1	12 1/4"	12"	29'-11 5/8"	N/A	24F-V4-DF/DF	Architectural	IFF RELEASED	929	929
B	BLK6-15	1	12 1/4"	12"	30'-8 3/4"	N/A	24F-V8-DF/DF	Architectural	IFF RELEASED	955	955
B	BLK6-16	1	12 1/4"	12"	29'-11 3/4"	N/A	24F-V4-DF/DF	Architectural	IFF RELEASED	930	930
B	BLK6-17	1	12 1/4"	12"	29'-11 5/8"	N/A	24F-V8-DF/DF	Architectural	IFF RELEASED	936	936
B	BLK6-18	1	12 1/4"	12"	24'-7 5/8"	N/A	24F-V4-DF/DF	Architectural	IFF RELEASED	771	771
C	C2-214	1	14 1/4"	29 3/4"	63'-1 1/2"	N/A	Comb3	Architectural	IFF RELEASED	5777	5777
C	C4-1	2	17 3/4"	29 3/4"	31'-11 1/2"	N/A	L2D-DF/DF	Architectural	IFF RELEASED	3433	6867
C	C4-2	4	17 3/4"	29 3/4"	31'-11 1/2"	N/A	L2D-DF/DF	Architectural	IFF RELEASED	3536	14144
C	C4-3	2	17 3/4"	29 3/4"	31'-11 1/2"	N/A	L2D-DF/DF	Architectural	IFF RELEASED	3530	7060
C	C4-4	11	14 1/4"	29 3/4"	31'-11 1/2"	N/A	L2D-DF/DF	Architectural	IFF RELEASED	2838	31220
C	C4-5	1	17 3/4"	29 3/4"	31'-11 1/2"	N/A	L2D-DF/DF	Architectural	IFF RELEASED	3172	3172
C	C4-6	5	17 3/4"	29 3/4"	31'-11 1/2"	N/A	L2D-DF/DF	Architectural	IFF RELEASED	3187	15937
C	C4-7	1	17 3/4"	29 3/4"	31'-10 1/2"	N/A	L2D-DF/DF	Architectural	IFF RELEASED	3561	3561
C	C4-8	2	17 3/4"	29 3/4"	31'-10 1/2"	N/A	L2D-DF/DF	Architectural	IFF RELEASED	3561	7121
C	C4-9	1	14 1/4"	29 3/4"	30'-8 5/8"	N/A	L2D-DF/DF	Architectural	IFF RELEASED	2675	2675
C	C4-10	2	17 3/4"	29 3/4"	31'-11 1/2"	N/A	L2D-DF/DF	Architectural	IFF RELEASED	3290	6580
C	C4-11	2	17 3/4"	29 3/4"	31'-11 1/2"	N/A	L2D-DF/DF	Architectural	IFF RELEASED	3428	6855
C	C4-12	1	17 3/4"	29 3/4"	31'-11 1/2"	N/A	L2D-DF/DF	Architectural	IFF RELEASED	3284	3284
C	C4-13	1	14 1/4"	29 3/4"	30'-8 5/8"	N/A	L2D-DF/DF	Architectural	IFF RELEASED	2675	2675
C	C4-14	1	17 3/4"	29 3/4"	31'-10 1/2"	N/A	L2D-DF/DF	Architectural	IFF RELEASED	3561	3561
C	C5-201	1	17 3/4"	29 3/4"	15'-2 5/8"	N/A	Comb2	Architectural	IFF RELEASED	1720	1720
C	C5-202	1	17 3/4"	29 3/4"	15'-2 5/8"	N/A	Comb2	Architectural	IFF RELEASED	1719	1719
C	C5-203	1	17 3/4"	29 3/4"	15'-2 5/8"	N/A	Comb2	Architectural	IFF RELEASED	1719	1719
C	C5-204	1	14 1/4"	29 3/4"	15'-2 5/8"	N/A	Comb2	Architectural	IFF RELEASED	1334	1334
C	C5-205	1	17 3/4"	29 3/4"	15'-5 1/2"	N/A	Comb2	Architectural	IFF RELEASED	1666	1666
C	C5-206	2	17 3/4"	29 3/4"	15'-5 1/8"	N/A	Comb2	Architectural	IFF RELEASED	1623	3247
C	C5-207	1	17 3/4"	29 3/4"	15'-5 1/2"	N/A	Comb2	Architectural	IFF RELEASED	1666	1666
C	C5-208	2	14 1/4"	29 3/4"	15'-5 1/8"	N/A	Comb2	Architectural	IFF RELEASED	1303	2606
C	C5-209	1	17 3/4"	29 3/4"	15'-5 1/2"	N/A	Comb2	Architectural	IFF RELEASED	1666	1666
C	C5-210	1	17 3/4"	29 3/4"	15'-5 1/2"	N/A	Comb2	Architectural	IFF RELEASED	1666	1666
C	C5-211	2	17 3/4"	29 3/4"	15'-5 1/8"	N/A	Comb2	Architectural	IFF RELEASED	1623	3247
C	C5-212	2	14 1/4"	29 3/4"	15'-5 1/8"	N/A	Comb2	Architectural	IFF RELEASED	1299	2598
C	C5-213	1	17 3/4"	29 3/4"	15'-2 5/8"	N/A	Comb2	Architectural	IFF RELEASED	1720	1720
C	C5-214	1	17 3/4"	29 3/4"	15'-2 5/8"	N/A	Comb2	Architectural	IFF RELEASED	1719	1719
C	C5-215	1	17 3/4"	29 3/4"	15'-2 5/8"	N/A	Comb2	Architectural	IFF RELEASED	1719	1719
C	C5-216	1	14 1/4"	29 3/4"	15'-2 5/8"	N/A	Comb2	Architectural	IFF RELEASED	1334	1334
C	C5-217	1	17 3/4"	29 3/4"	15'-5 1/2"	N/A	Comb2	Architectural	IFF RELEASED	1666	1666
C	C5-218	1	17 3/4"	29 3/4"	15'-5 1/2"	N/A	Comb2	Architectural	IFF RELEASED	1666	1666
C	C5-219	6	17 3/4"	29 3/4"	15'-5 1/8"	N/A	Comb2	Architectural	IFF RELEASED	1623	9740
C	C5-220	1	17 3/4"	29 3/4"	15'-5 1/2"	N/A	Comb2	Architectural	IFF RELEASED	1666	1666
C	C5-221	2	14 1/4"	29 3/4"	15'-5 1/8"	N/A	Comb2	Architectural	IFF RELEASED	1303	2606
C	C5-231	3	17 3/4"	29 3/4"	15'-5 1/8"	N/A	Comb2	Architectural	IFF RELEASED	1623	4870
C	C5-232	1	17 3/4"	29 3/4"	15'-5 1/2"	N/A	Comb2	Architectural	IFF RELEASED	1666	1666
P	P6-1	6	8 1/4"	22 1/4"	29'-5 5/8"	1"	24F-V4-DF/DF	Architectural	IFF RELEASED	1191	7145
P	P6-2	66	8 1/4"	22 1/4"	29'-11 3/4"	1"	24F-V4-DF/DF	Architectural	IFF RELEASED	1206	79569
P	P6-3	6	8 1/4"	22 1/4"	29'-5 1/4"	1"	24F-V4-DF/DF	Architectural	IFF RELEASED	1180	7080
P	P6-4	2	8 1/4"	23 3/4"	29'-5 5/8"	1"	24F-V4-DF/DF	Architectural	IFF RELEASED	1270	2540
P	P6-5	6	8 1/4"	23 3/4"	29'-11 3/4"	1"	24F-V4-DF/DF	Architectural	IFF RELEASED	1285	7711
P	P6-13	2	8 1/4"	22 1/4"	29'-5 5/8"	1"	24F-V4-DF/DF	Architectural		1191	2382

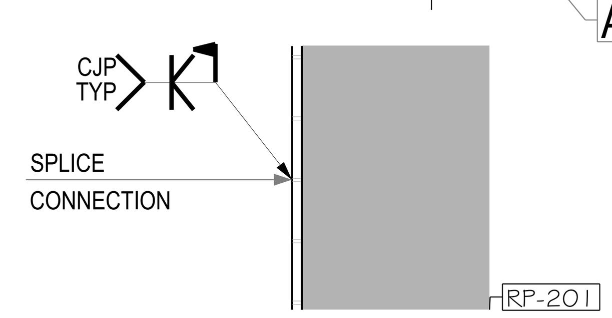

DETAIL 24
TYPICAL SIDE PLATE FIELD WELDING DETAIL

REV	DATE	REMARKS
1	12/31/2020	SMTC IFF layout revisions
0	04/30/2020	IFF
L	03/04/2020	Area B OFA
K	02/05/2020	Area B OFA
J	01/17/2020	Area A OFA glulam
I	12/11/2019	Area A OFA
H	11/18/2019	Area B Geo.
G	11/15/2019	Area B Geo.

Ref Dwg: S105

ISSUED SMTC IFF layo
DATE: 12/31/2020

STRUCTURLAM
MASS TIMBER CORPORATION
Intelligence In Wood

DATE 18/Jul/2019
BY CMI
DWG TITLE ROOF FRAMING PLAN

SHEET SL12
REV. 1

PROJECT
BORREGAS
Job# 25991

SEE SL41 FOR CLT PANEL SCHEDULE

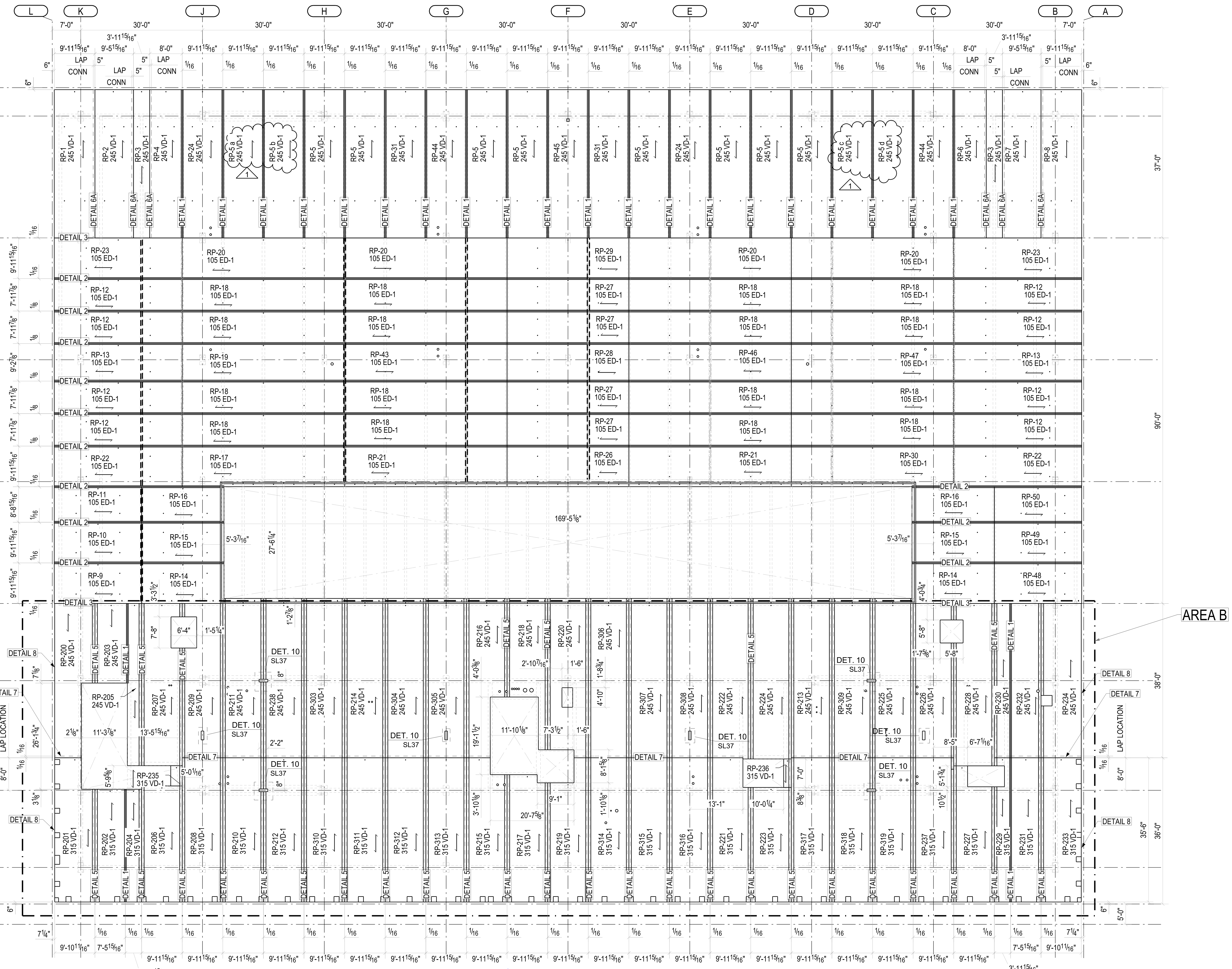

CLT SCHEDULE

TYPE	NAME	QTY	THICKNESS	WIDTH	LENGTH	WEIGHT(LB)	TOTAL WEIGHT
315 VD-1	RP-201	1	12 3/8"	9'-10 11/16"	35'-11 1/16"	10504	10504
315 VD-1	RP-202	1	12 3/8"	7'-5 15/16"	27'-9 1/8"	6651	6651
315 VD-1	RP-204	1	12 3/8"	3'-11 15/16"	27'-9 1/8"	3449	3449
315 VD-1	RP-206	1	12 3/8"	9'-11 15/16"	28'-7"	9032	9032
315 VD-1	RP-208	1	12 3/8"	9'-11 15/16"	35'-11 1/16"	11252	11252
315 VD-1	RP-210	1	12 3/8"	9'-11 15/16"	35'-11 1/16"	11243	11243
315 VD-1	RP-212	1	12 3/8"	9'-11 15/16"	35'-11 1/16"	11254	11254
315 VD-1	RP-215	1	12 3/8"	9'-11 15/16"	35'-11 1/16"	10689	10689
315 VD-1	RP-217	1	12 3/8"	9'-11 15/16"	31'-4 1/8"	9750	9750
315 VD-1	RP-219	1	12 3/8"	9'-11 15/16"	35'-11 1/16"	9956	9956
315 VD-1	RP-221	1	12 3/8"	9'-11 15/16"	35'-11 1/16"	10853	10853
315 VD-1	RP-223	1	12 3/8"	9'-11 15/16"	28'-2 3/8"	8910	8910
315 VD-1	RP-227	1	12 3/8"	9'-11 15/16"	33'-6 3/16"	9511	9511
315 VD-1	RP-229	1	12 3/8"	3'-11 15/16"	35'-11 1/16"	4045	4045
315 VD-1	RP-231	1	12 3/8"	7'-5 15/16"	35'-11 1/16"	8549	8549
315 VD-1	RP-233	1	12 3/8"	9'-10 11/16"	35'-11 1/16"	11324	11324
315 VD-1	RP-235	1	12 3/8"	2'-9 15/16"	4'-11 5/8"	430	430
315 VD-1	RP-236	1	12 3/8"	1'-10 11/16"	7'-0 1/8"	390	390
315 VD-1	RP-237	1	12 3/8"	9'-11 15/16"	35'-11 1/16"	11245	11245
315 VD-1	RP-310	1	12 3/8"	9'-11 15/16"	35'-11 1/16"	11270	11270
315 VD-1	RP-311	1	12 3/8"	9'-11 15/16"	35'-11 1/16"	11273	11273
315 VD-1	RP-312	1	12 3/8"	9'-11 15/16"	35'-11 1/16"	11273	11273
315 VD-1	RP-313	1	12 3/8"	9'-11 15/16"	35'-11 1/16"	11270	11270
315 VD-1	RP-314	1	12 3/8"	9'-11 15/16"	35'-11 1/16"	11247	11247
315 VD-1	RP-315	1	12 3/8"	9'-11 15/16"	35'-11 1/16"	11273	11273
315 VD-1	RP-316	1	12 3/8"	9'-11 15/16"	35'-11 1/16"	11258	11258
315 VD-1	RP-317	1	12 3/8"	9'-11 15/16"	35'-11 1/16"	11270	11270
315 VD-1	RP-318	1	12 3/8"	9'-11 15/16"	35'-11 1/16"	11248	11248
315 VD-1	RP-319	1	12 3/8"	9'-11 15/16"	35'-11 1/16"	11248	11248
245 VD-1	RP-1	1	9 5/8"	10'-0"	36'-5 15/16"	9189	9189
245 VD-1	RP-2	1	9 5/8"	9'-11"	36'-5 15/16"	8910	8910
245 VD-1	RP-3	2	9 5/8"	4'-10"	36'-5 15/16"	4141	8282
245 VD-1	RP-4	1	9 5/8"	8'-0"	36'-5 15/16"	7289	7289
245 VD-1	RP-5	12	9 5/8"	9'-11 15/16"	36'-5 15/16"	9336	112037
245 VD-1	RP-6	1	9 5/8"	8'-0"	36'-5 15/16"	7290	7290
245 VD-1	RP-7	1	9 5/8"	9'-11"	36'-5 15/16"	8913	8913
245 VD-1	RP-8	1	9 5/8"	10'-0"	36'-5 15/16"	9190	9190
245 VD-1	RP-24	2	9 5/8"	9'-11 15/16"	36'-5 15/16"	9327	18654
245 VD-1	RP-31	2	9 5/8"	9'-11 15/16"	36'-5 15/16"	9336	18673
245 VD-1	RP-44	2	9 5/8"	9'-11 15/16"	36'-5 15/16"	9327	18654
245 VD-1	RP-45	1	9 5/8"	9'-11 15/16"	36'-5 15/16"	9325	9325
245 VD-1	RP-200	1	9 5/8"	9'-10 11/16"	37'-11 7/8"	7925	7925
245 VD-1	RP-203	1	9 5/8"	7'-11 15/16"	19'-7 1/16"	3882	3882
245 VD-1	RP-205	1	9 5/8"	3'-5 15/16"	39'-11 3/16"	3303	3303
245 VD-1	RP-207	1	9 5/8"	9'-11 15/16"	39'-11 3/16"	9222	9222
245 VD-1	RP-209	1	9 5/8"	9'-11 15/16"	37'-11 7/8"	8509	8509
245 VD-1	RP-211	1	9 5/8"	9'-11 15/16"	39'-2 13/16"	9467	9467
245 VD-1	RP-213	1	9 5/8"	9'-11 15/16"	39'-2 13/16"	9495	9495
245 VD-1	RP-214	1	9 5/8"	9'-11 15/16"	39'-2 13/16"	9493	9493
245 VD-1	RP-216	1	9 5/8"	9'-11 15/16"	39'-2 13/16"	8024	8024
245 VD-1	RP-218	1	9 5/8"	9'-11 15/16"	37'-3 1/8"	6535	6535
245 VD-1	RP-220	1	9 5/8"	9'-11 15/16"	39'-2 13/16"	8883	8883
245 VD-1	RP-222	1	9 5/8"	9'-11 15/16"	39'-6 1/4"	9518	9518
245 VD-1	RP-224	1	9 5/8"	9'-11 15/16"	39'-6 1/4"	9618	9618
245 VD-1	RP-225	1	9 5/8"	9'-11 15/16"	39'-2 13/16"	9482	9482
245 VD-1	RP-226	1	9 5/8"	9'-11 15/16"	37'-11 7/8"	8698	8698
245 VD-1	RP-228	1	9 5/8"	9'-11 15/16"	39'-11 11/16	9429	9429
245 VD-1	RP-230	1	9 5/8"	3'-11 15/16"	37'-11 7/8"	3599	3599
245 VD-1	RP-232	1	9 5/8"	7'-5 15/16"	37'-11 7/8"	6992	6992
245 VD-1	RP-234	1	9 5/8"	9'-10 11/16"	37'-11 7/8"	9192	9192
245 VD-1	RP-238	1	9 5/8"	9'-11 15/16"	39'-2 13/16"	9484	9484
245 VD-1	RP-303	1	9 5/8"	9'-11 15/16"	39'-2 13/16"	9497	9497
245 VD-1	RP-304	1	9 5/8"	9'-11 15/16"	39'-2 13/16"	9498	9498
245 VD-1	RP-305	1	9 5/8"	9'-11 15/16"	39'-2 13/16"	9461	9461
245 VD-1	RP-306	1	9 5/8"	9'-11 15/16"	39'-2 13/16"	9498	9498
245 VD-1	RP-307	1	9 5/8"	9'-11 15/16"	39'-2 13/16"	9498	9498
245 VD-1	RP-308	1	9 5/8"	9'-11 15/16"	39'-2 13/16"	9451	9451
245 VD-1	RP-309	1	9 5/8"	9'-11 15/16"	39'-2 13/16"	9474	9474
105 ED-1	RP-9	1	4 1/8"	9'-11 15/16"	21'-5 15/16"	2355	2355
105 ED-1	RP-10	1	4 1/8"	9'-11 15/16"	21'-5 15/16"	2342	2342
105 ED-1	RP-11	1	4 1/8"	8'-8 15/16"	21'-5 15/16"	2045	2045
105 ED-1	RP-12	8	4 1/8"	7'-11 7/8"	31'-5 15/16"	2736	21889
105 ED-1	RP-13	2	4 1/8"	9'-2 7/8"	31'-5 15/16"	3170	6340
105 ED-1	RP-14	2	4 1/8"	9'-11 15/16"	20'-3 7/16"	2222	4444
105 ED-1	RP-15	2	4 1/8"	9'-11 15/16"	20'-3 7/16"	2210	4419
105 ED-1	RP-16	2	4 1/8"	8'-8 15/16"	20'-3 7/16"	1930	3860
105 ED-1	RP-17	1	4 1/8"	9'-11 15/16"	39'-11 15/16	4375	4375
105 ED-1	RP-18	16	4 1/8"	7'-11 7/8"	39'-11 15/16	3474	55590
105 ED-1	RP-19	1	4 1/8"	9'-2 7/8"	39'-11 15/16	4018	4018
105 ED-1	RP-20	4	4 1/8"	9'-11 15/16"	39'-11 15/16	4381	17525
105 ED-1	RP-21	2	4 1/8"	9'-11 13/16"	39'-11 15/16	4378	8757
105 ED-1	RP-22	2	4 1/8"	9'-11 15/16"	31'-5 15/16"	3431	6862
105 ED-1	RP-23	2	4 1/8"	9'-11 15/16"	31'-5 15/16"	3450	6901
105 ED-1	RP-25	1	4 1/8"	5'-3 3/8"	4'-3"	175	175
105 ED-1	RP-26	1	4 1/8"	9'-11 13/16"	29'-11 15/16	3284	3284
105 ED-1	RP-27	4	4 1/8"	7'-11 7/8"	29'-11 15/16	2606	10422
105 ED-1	RP-28	1	4 1/8"	9'-2 7/8"	29'-11 15/16	3019	3019
105 ED-1	RP-29	1	4 1/8"	9'-11 15/16"	29'-11 15/16	3286	3286
105 ED-1	RP-30	1	4 1/8"	9'-11 13/16"	39'-11 15/16	4372	4372
105 ED-1	RP-32	1	4 1/8"	10'-0"	4'-10 5/16"	498	498
105 ED-1	RP-33	1	4 1/8"	5'-3 3/8"	4'-3"	175	175
105 ED-1	RP-34	1	4 1/8"	10'-0"	4'-2 1/16"	422	422
105 ED-1	RP-35	1	4 1/8"	9'-9 13/16"	3'-5 13/16"	341	341
105 ED-1	RP-36	2	4 1/8"	5'-3 3/8"	2'-8"	155	311
105 ED-1	RP-37	12	4 1/8"	9'-11 15/16"	4'-3"	323	3870
105 ED-1	RP-38	12	4 1/8"	9'-11 15/16"	2'-8"	294	3525
105 ED-1	RP-39	2	4 1/8"	9'-11 15/16"	4'-3"	322	644
105 ED-1	RP-40	2	4 1/8"	9'-11 15/16"	2'-8"	291	582
105 ED-1	RP-41	2	4 1/8"	9'-11 15/16"	4'-3"	322	644
105 ED-1	RP-42	2	4 1/8"	9'-11 15/16"	2'-8"	291	582
105 ED-1	RP-43	1	4 1/8"	9'-2 7/8"	39'-11 15/16	4021	4021
105 ED-1	RP-46	1	4 1/8"	9'-2 7/8"	39'-11 15/16	4021	4021
105 ED-1	RP-47	1	4 1/8"	9'-2 7/8"	39'-11 15/16	4018	4018
105 ED-1	RP-48	1	4 1/8"	9'-11 15/16"	21'-5 15/16"	2355	2355
105 ED-1	RP-49	1	4 1/8"	9'-11 15/16"	21'-5 15/16"	2342	2342
105 ED-1	RP-50	1	4 1/8"	8'-8 15/16"	21'-5 15/16"	2045	2045
105 ED-1	RP-300	1	4 1/8"	10'-0"	4'-10 5/16"	498	498
105 ED-1	RP-301	1	4 1/8"	10'-0"	4'-2 1/16"	422	422
105 ED-1	RP-302	1	4 1/8"	9'-9 13/16"	3'-5 13/16"	341	341
							943135

NOTES:

1. ▒ - DENOTES CHANGE IN TYPICAL CLT TO GLULAM FIXING INTO 4" SPACING

ROOF CLT PLAN

U/S OF CLT = EL. + 78'-9 7/8" (U.N.O.)

REV	DATE	REMARKS
1	12/31/2020	SMTC IFF layout revisions
L	03/04/2020	Area B OFA
K	02/05/2020	Area B OFA
J	01/17/2020	Area A OFA glulam
I	12/11/2019	Area A OFA
H	11/18/2019	Area B Geo.
G	11/15/2019	Area B Geo.
F	10/22/2019	Area B Geo.

Ref Dwg: S105

***WORK THIS SHEET WITH SL37

ISSUED SMTC IFF layo

DATE: 12/31/2020

STRUCTURLAM
MASS TIMBER CORPORATION
Intelligence In Wood

DATE 18/Jul/2019

BY CMI

DWG TITLE ROOF CLT PLAN

SHEET SL13

REV. 1

PROJECT

BORREGAS

Job# 25991

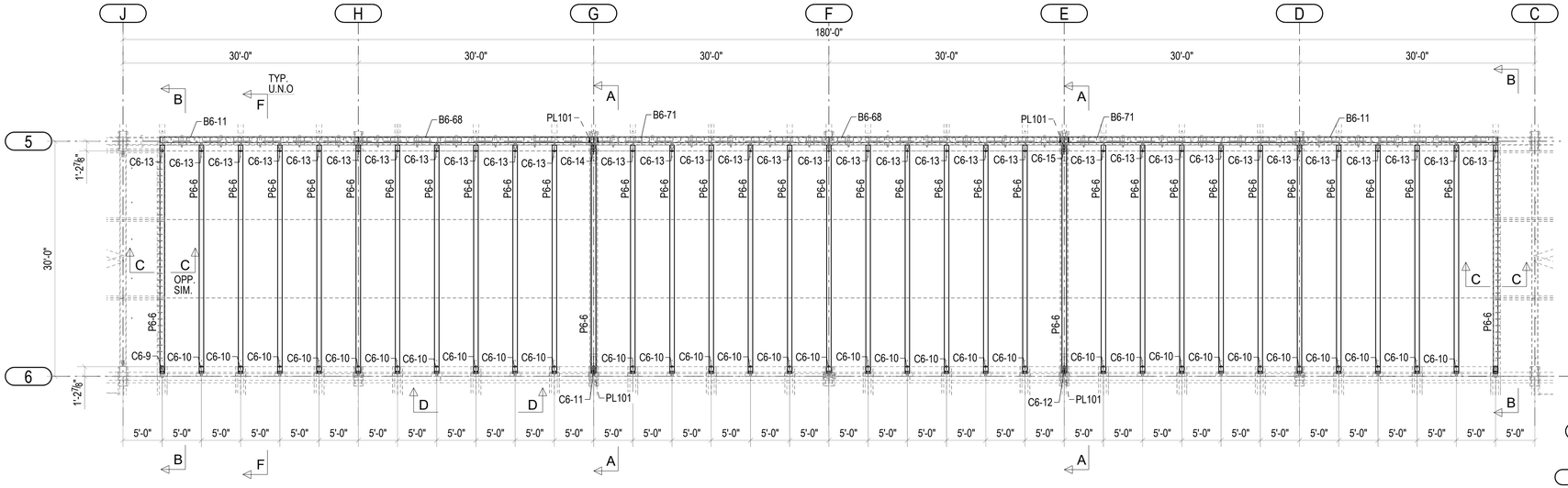

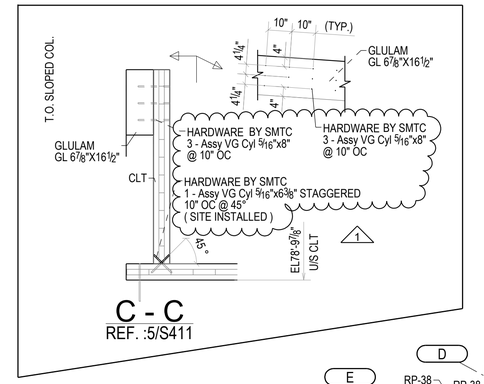

C - C
REF. :5/S411

CLT SCHEDULE								
MARK	QTY	LAYUP	WIDTH	LENGTH	AREA (SQ.FT.)	VOLUME (CU.FT.)	WEIGHT (LBS)
100-ED-1	RP-25	1	4-1/8"	3'-3-3/8"	4'-0"	1.75	175
100-ED-2	RP-32	1	4-1/8"	10'-0"	4'-10-3/16"	4.09	408
100-ED-3	RP-33	1	4-1/8"	3'-3-3/8"	4'-0"	1.75	175
100-ED-4	RP-34	1	4-1/8"	10'-0"	4'-4-1/16"	4.22	422
100-ED-5	RP-35	1	4-1/8"	8'-8-13/16"	3'-5-13/16"	3.41	341
100-ED-6	RP-36	1	4-1/8"	6'-3-3/8"	2'-8"	1.63	211
100-ED-7	RP-37	13	4-1/8"	9'-11-13/16"	4'-3"	3.23	3870
100-ED-8	RP-38	2	4-1/8"	9'-11-13/16"	2'-8"	2.44	3025
100-ED-9	RP-39	1	4-1/8"	9'-11-13/16"	4'-3"	3.23	344
100-ED-9	RP-40	1	4-1/8"	9'-11-13/16"	2'-8"	2.44	382
100-ED-9	RP-41	1	4-1/8"	9'-11-13/16"	4'-3"	3.23	344
100-ED-9	RP-42	1	4-1/8"	9'-11-13/16"	2'-8"	2.44	382
100-ED-9	RP-300	1	4-1/8"	10'-0"	4'-10-3/16"	4.66	466
100-ED-9	RP-301	1	4-1/8"	10'-0"	4'-2-1/16"	4.22	422
100-ED-9	RP-302	1	4-1/8"	8'-8-13/16"	3'-5-13/16"	3.41	341
		26					19926

GLULAM SCHEDULE											
TYPE	MARK	QTY	WIDTH	DEPTH	GRADE	SPECIES	MARK	WIDTH	DEPTH	LENGTH	WEIGHT (LBS)
B	B11	1	6-7/8"	16-1/2"	24-24F	N/A	24-24-24F-V4	Architectural	6-7/8"x16½"	30'-0"	1,154
B	B16	1	6-7/8"	31-1/2"	24-24F	N/A	24-24-24F-V4	Architectural	6-7/8"x31½"	30'-0"	2,204
B	B68	2	6-7/8"	16-1/2"	20-1.5E-FS	N/A	20F-1.5E-DF/DF	Architectural	6-7/8"x16½"	30'-0"	1,154
B	B71	2	6-7/8"	31-1/2"	20-1.5E-FS	N/A	20F-1.5E-DF/DF	Architectural	6-7/8"x31½"	30'-0"	2,204
C	C6-9	1	4-1/8"	10-3/4"	24-1.5E	N/A	D-FIR	Architectural	4-1/8"x10¾"	10'-0"	31
C	C6-10	1	4-1/8"	10-3/4"	24-1.5E	N/A	D-FIR	Architectural	4-1/8"x10¾"	10'-0"	31
C	C6-11	1	4-1/8"	10-3/4"	24-1.5E	N/A	D-FIR	Architectural	4-1/8"x10¾"	10'-0"	31
C	C6-12	1	4-1/8"	10-3/4"	24-1.5E	N/A	D-FIR	Architectural	4-1/8"x10¾"	10'-0"	31
C	C6-13	13	4-1/8"	4-3/4"	24-1.5E	N/A	D-FIR	Architectural	4-1/8"x4¾"	10'-0"	14
C	C6-14	1	4-1/8"	4-3/4"	24-1.5E	N/A	D-FIR	Architectural	4-1/8"x4¾"	10'-0"	14
C	C6-15	1	4-1/8"	4-3/4"	24-1.5E	N/A	D-FIR	Architectural	4-1/8"x4¾"	10'-0"	14
C	P6-6	13	4-1/8"	10-3/4"	24-1.5E	N/A	D-FIR	Architectural	4-1/8"x10¾"	10'-0"	31
B	B6-11	2	6-7/8"	16-1/2"	24-24F	N/A	24-24-24F-V4	Architectural	6-7/8"x16½"	30'-0"	1,154
B	B6-68	2	6-7/8"	31-1/2"	20-1.5E-FS	N/A	20F-1.5E-DF/DF	Architectural	6-7/8"x31½"	30'-0"	2,204
B	B6-71	2	6-7/8"	31-1/2"	20-1.5E-FS	N/A	20F-1.5E-DF/DF	Architectural	6-7/8"x31½"	30'-0"	2,204
		26									20,926

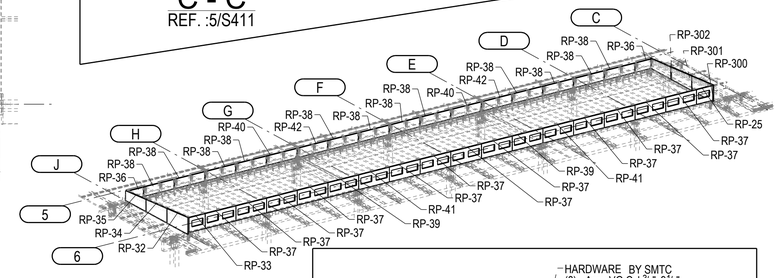

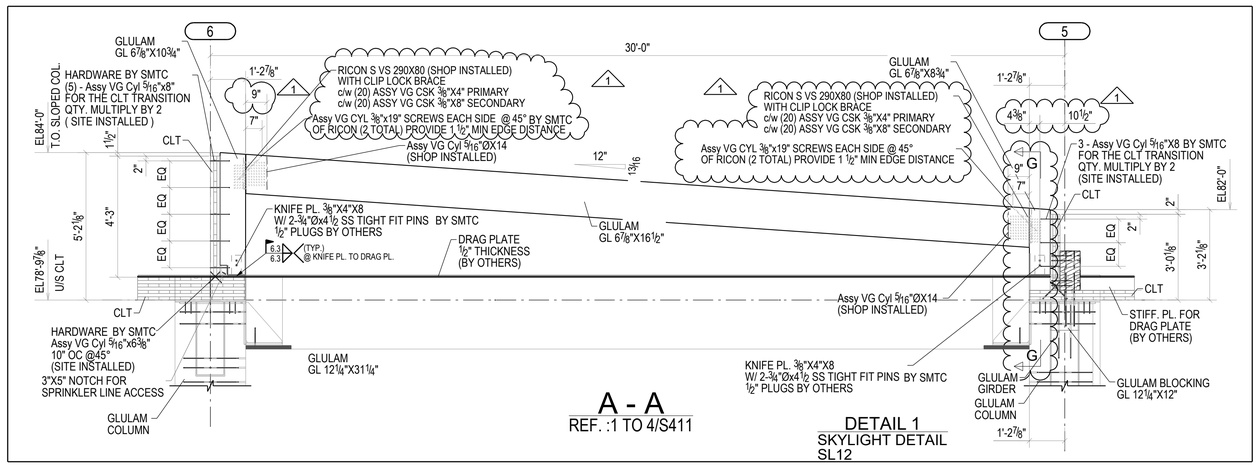

A - A
REF. :1 TO 4/S411

DETAIL 1
SKYLIGHT DETAIL
SL12

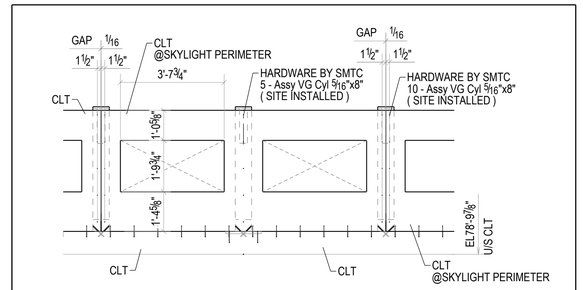

D - D
REF. :6/S411
TYP. WINDOW OPENING
FOR CLT PERIMETER ALONG GRIDLINE 6

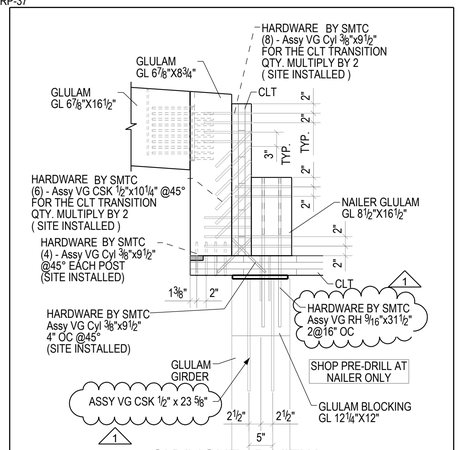

SKYLIGHT 3D VIEW
DETAIL 1

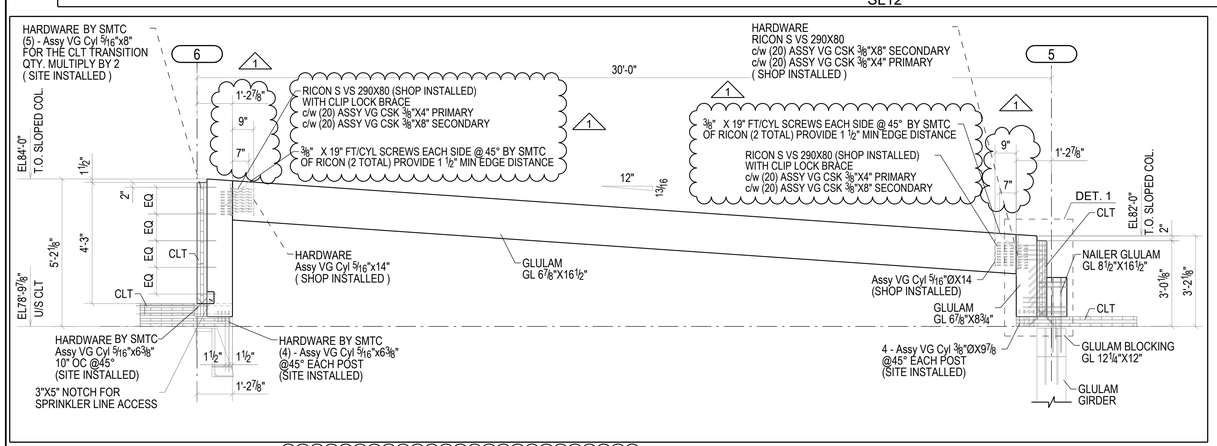

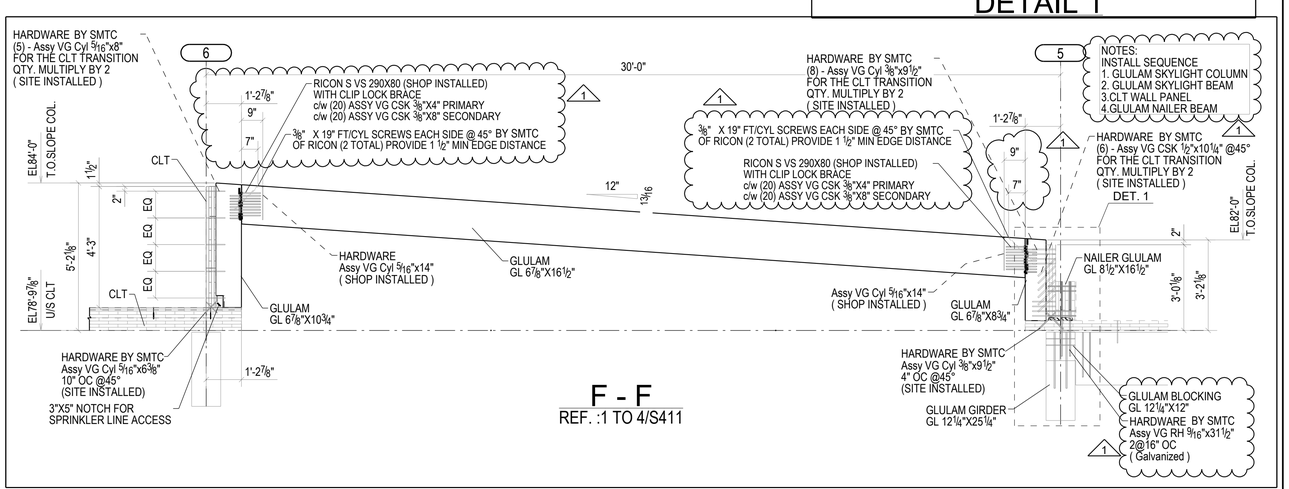

F - F
REF. :1 TO 4/S411

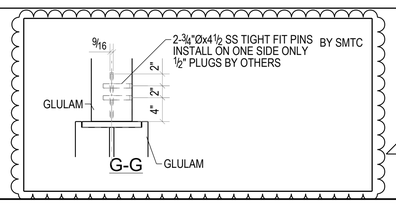

G-G

REV	DATE	REMARKS
1	12/31/2020	SMTC IFF layout revisions
0	04/30/2020	IFF
L	03/04/2020	Area B OFA
K	02/05/2020	Area B OFA
J	01/17/2020	Area A OFA glulam
I	12/11/2019	Area A OFA
D	11/08/2019	Area B Geo.
C	10/29/2019	Area B Geo.

Ref Dwg:

ISSUED SMTC IFF layo

DATE: 12/31/2020

STRUCTURLAM
MASS TIMBER CORPORATION
Intelligence In Wood

B - B

DATE 18/Jul/2019	SHEET	REV.	PROJECT
BY CMI	SL14	1	BORREGAS
DWG TITLE SKYLIGHT DETAILS			Job# 25991

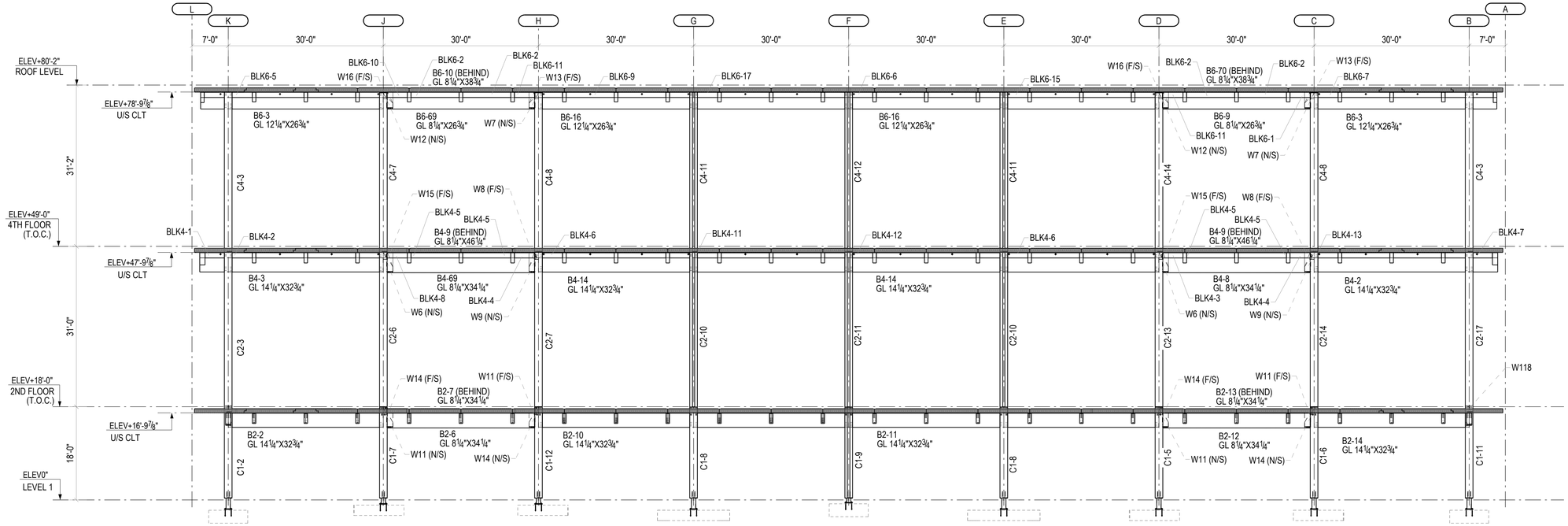

ELEVATION ALONG GRIDLINE 2

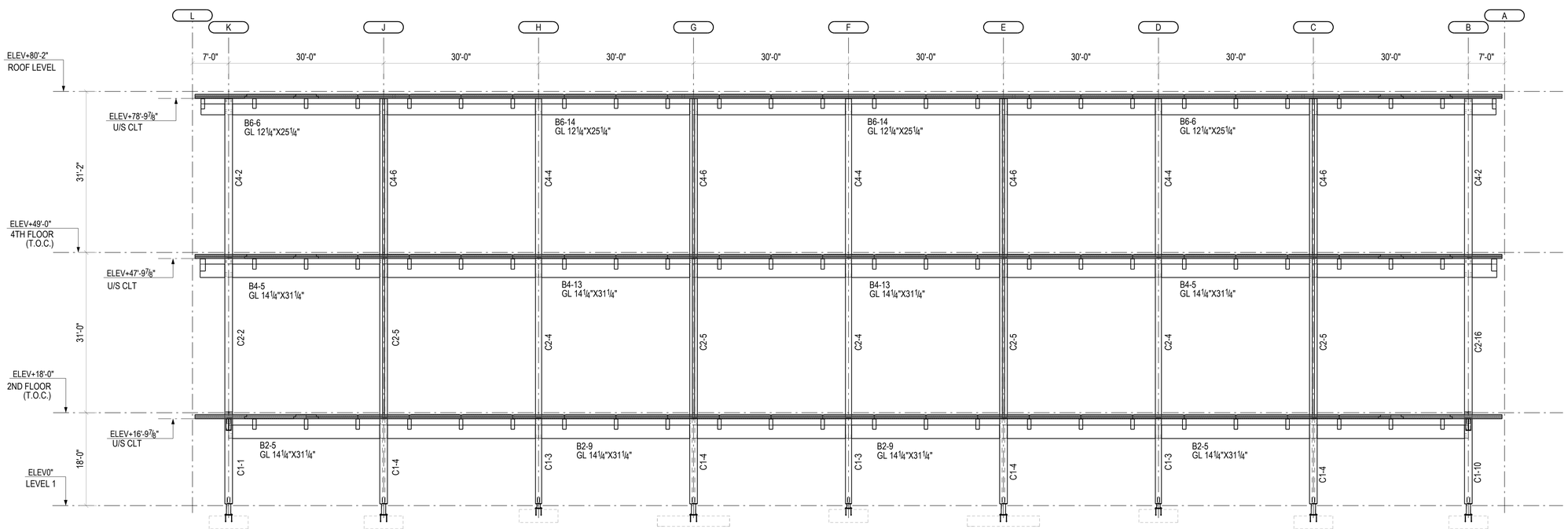

ELEVATION ALONG GRIDLINE 3

REV	DATE	REMARKS
0	04/30/2020	IFF
L	03/04/2020	Area B OFA
K	02/05/2020	Area B OFA
J	01/17/2020	Area A OFA glulam
I	12/11/2019	Area A OFA
H	11/18/2019	Area B Geo.
G	11/15/2019	Area B Geo.
F	10/22/2019	Area B Geo.

Ref Dwg:

ISSUED IFF

DATE: 04/30/2020

STRUCTURLAM
MASS TIMBER CORPORATION
Intelligence In Wood

DATE 18/Jul/2019	SHEET	REV.	PROJECT
BY CMI	SL15	0	BORREGAS
DWG TITLE ELEVATION ALONG GRIDLINE 2 & 3			Job# 25991

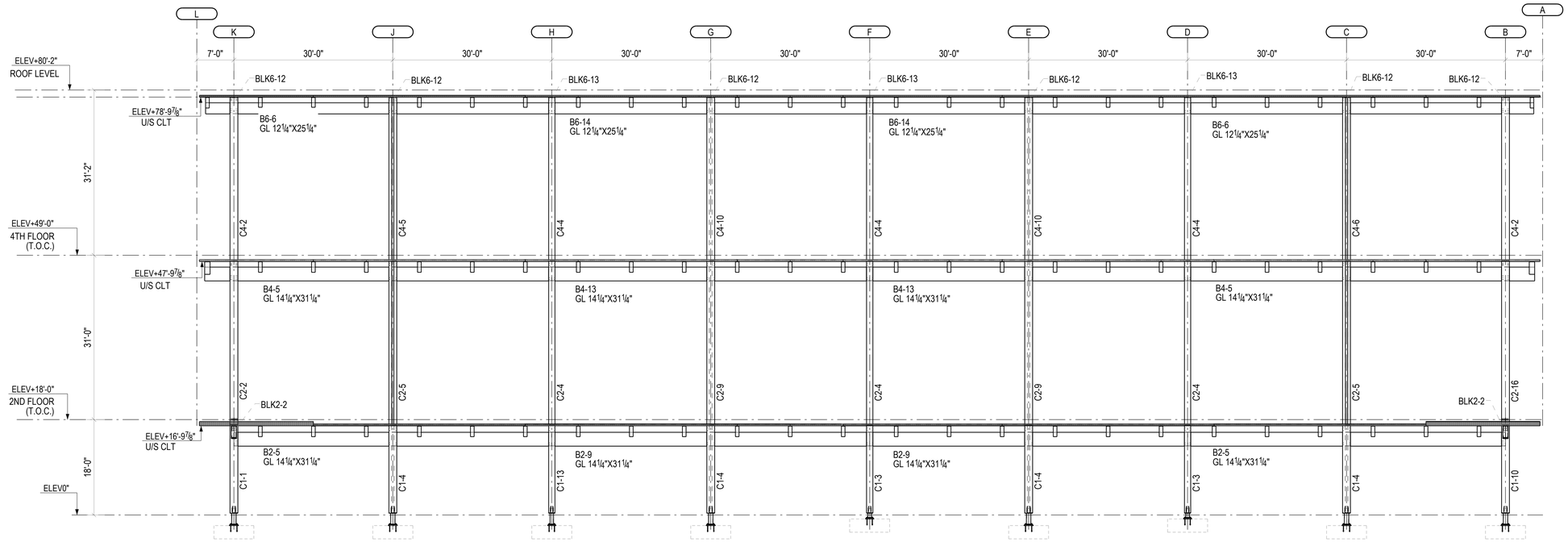

ELEVATION ALONG GRIDLINE 4

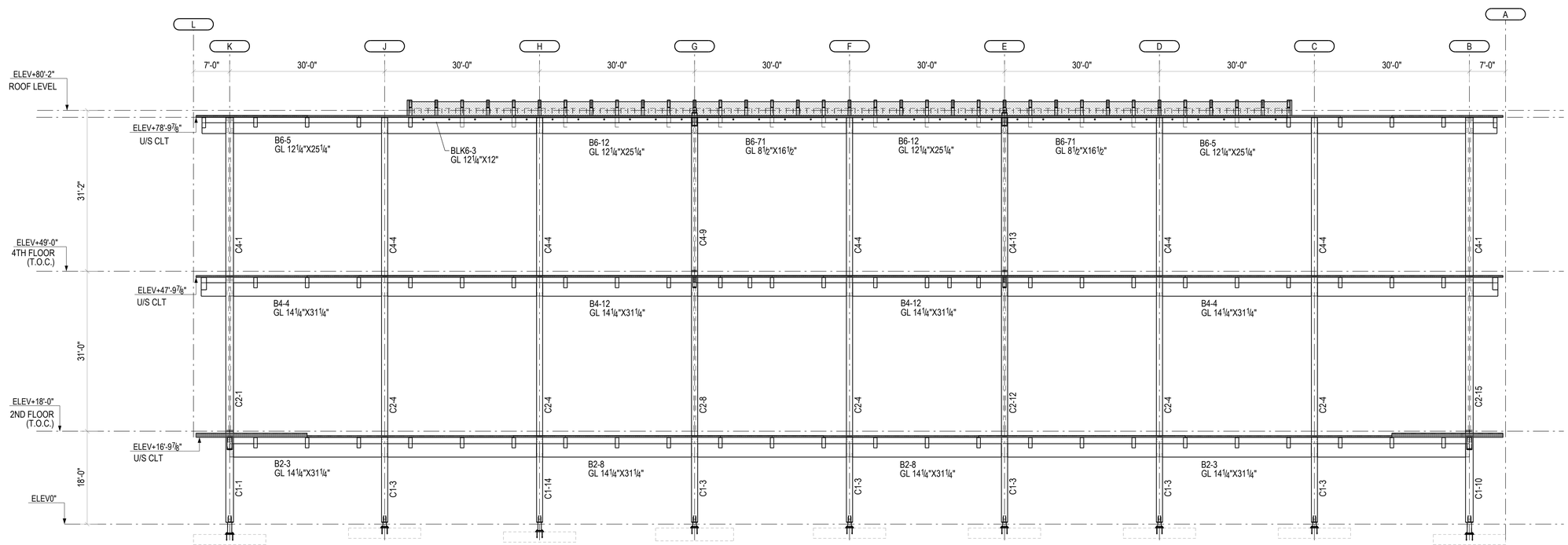

ELEVATION ALONG GRIDLINE 5

REV	DATE	REMARKS
0	04/30/2020	IFF
L	03/04/2020	Area B OFA
K	02/05/2020	Area B OFA
J	01/17/2020	Area A OFA glulam
I	12/11/2019	Area A OFA
H	11/18/2019	Area B Geo.
G	11/15/2019	Area B Geo.
F	10/22/2019	Area B Geo.

Ref Dwg:

ISSUED IFF

DATE: 04/30/2020

STRUCTURLAM
MASS TIMBER CORPORATION
Intelligence In Wood

DATE 18/Jul/2019	SHEET	REV.	PROJECT
BY CMI	SL16	0	BORREGAS
DWG TITLE ELEVATION ALONG GRIDLINE 4 & 5			Job# 25991

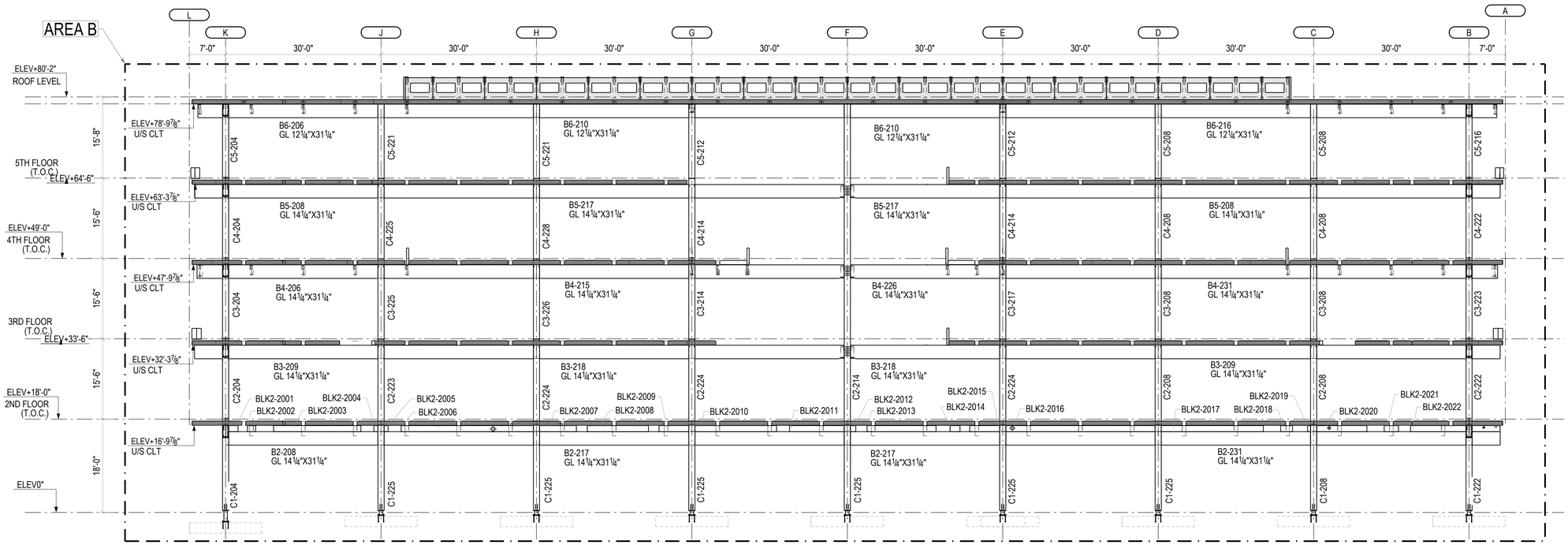

ELEVATION ALONG GRIDLINE 6

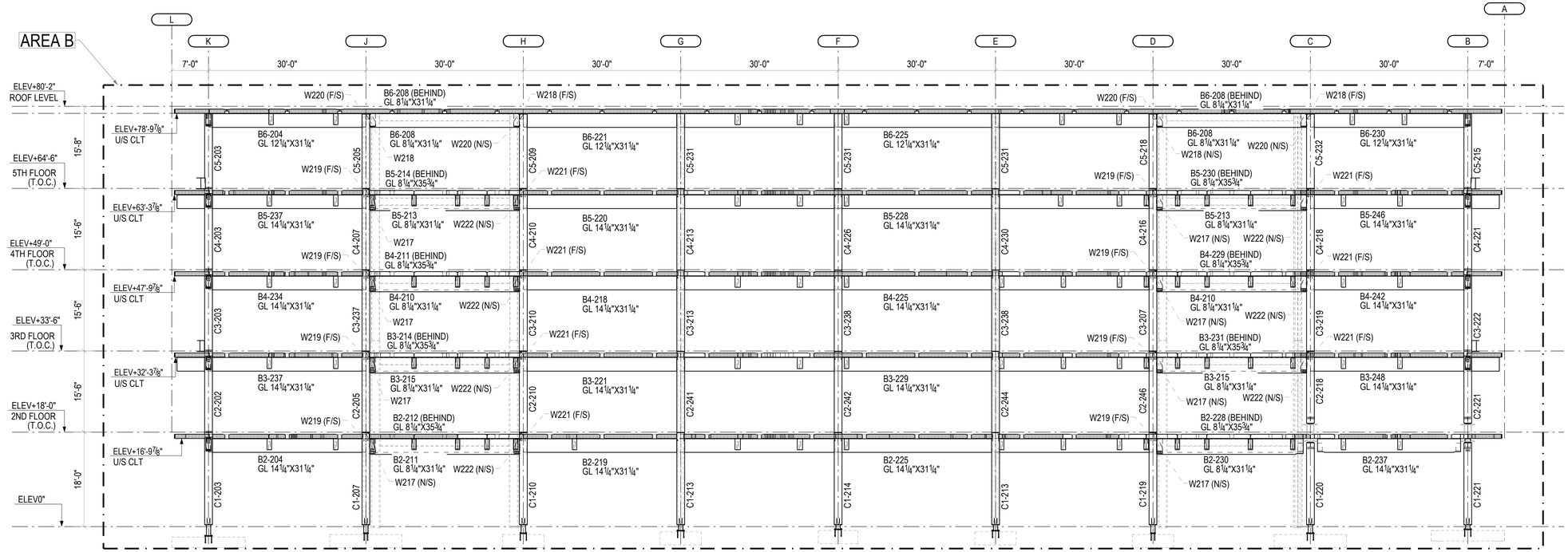

ELEVATION ALONG GRIDLINE 7

REV	DATE	REMARKS
0	04/30/2020	IFF
L	03/04/2020	Area B OFA
K	02/05/2020	Area B OFA
J	01/17/2020	Area A OFA glulam
I	12/11/2019	Area A OFA
H	11/18/2019	Area B Geo.
G	11/15/2019	Area B Geo.
F	10/22/2019	Area B Geo.

Ref Dwg:

ISSUED IFF

DATE: 04/30/2020

STRUCTURLAM
MASS TIMBER CORPORATION
Intelligence In Wood

DATE 18/Jul/2019	SHEET	REV.	PROJECT
BY CMI	SL17	0	BORREGAS
DWG TITLE ELEVATION ALONG GRIDLINE 6 & 7			Job# 25991

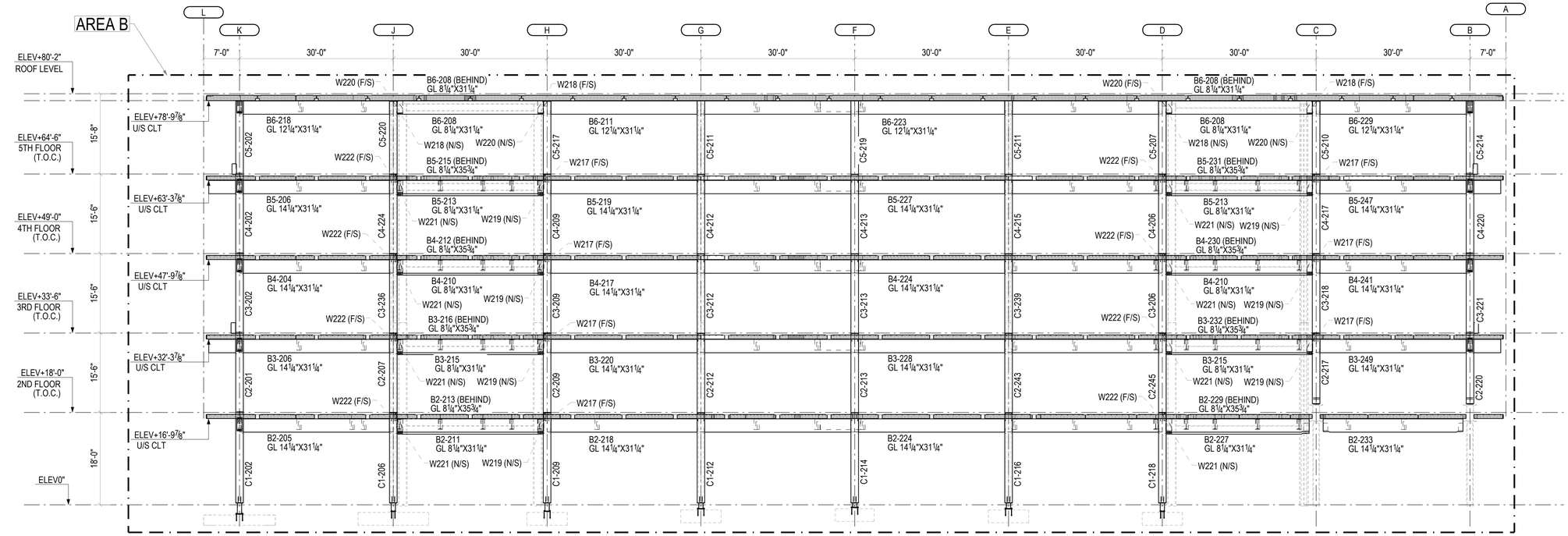

ELEVATION ALONG GRIDLINE 8

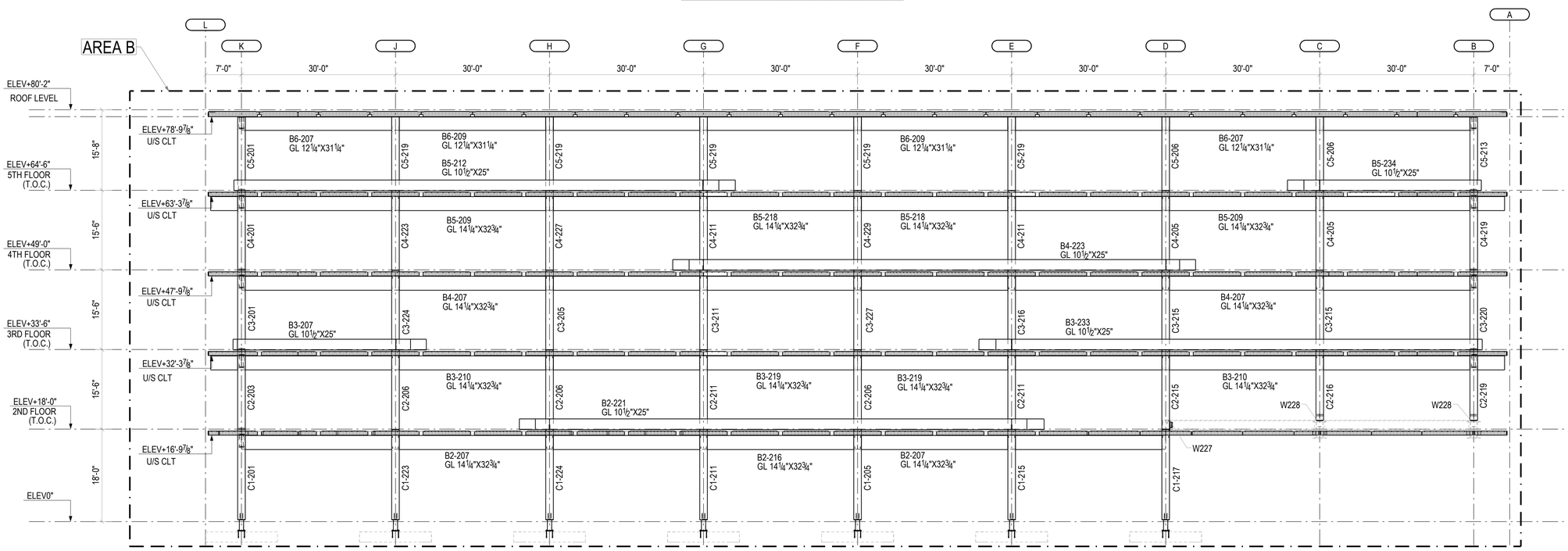

ELEVATION ALONG GRIDLINE 9

REV	DATE	REMARKS
0	04/30/2020	IFF
L	03/04/2020	Area B OFA
K	02/05/2020	Area B OFA
J	01/17/2020	Area A OFA glulam
I	12/11/2019	Area A OFA
H	11/18/2019	Area B Geo.
G	11/15/2019	Area B Geo.
F	10/22/2019	Area B Geo.

Ref Dwg:

ISSUED IFF

DATE: 04/30/2020

STRUCTURLAM
MASS TIMBER CORPORATION
Intelligence In Wood

DATE 18/Jul/2019	SHEET	REV.	PROJECT
BY CMI	SL18	0	BORREGAS
DWG TITLE ELEVATION ALONG GRIDLINE 8 & 9			Job# 25991

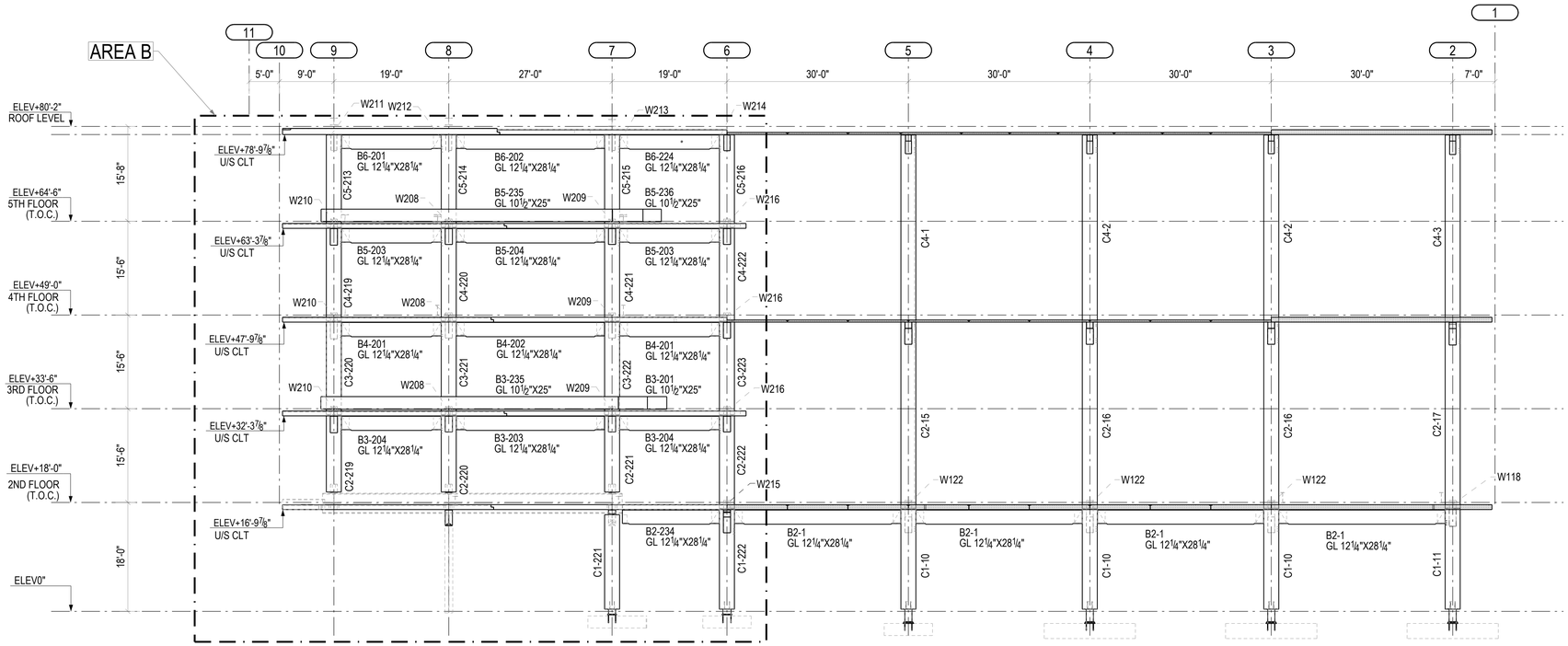

ELEVATION ALONG GRIDLINE B

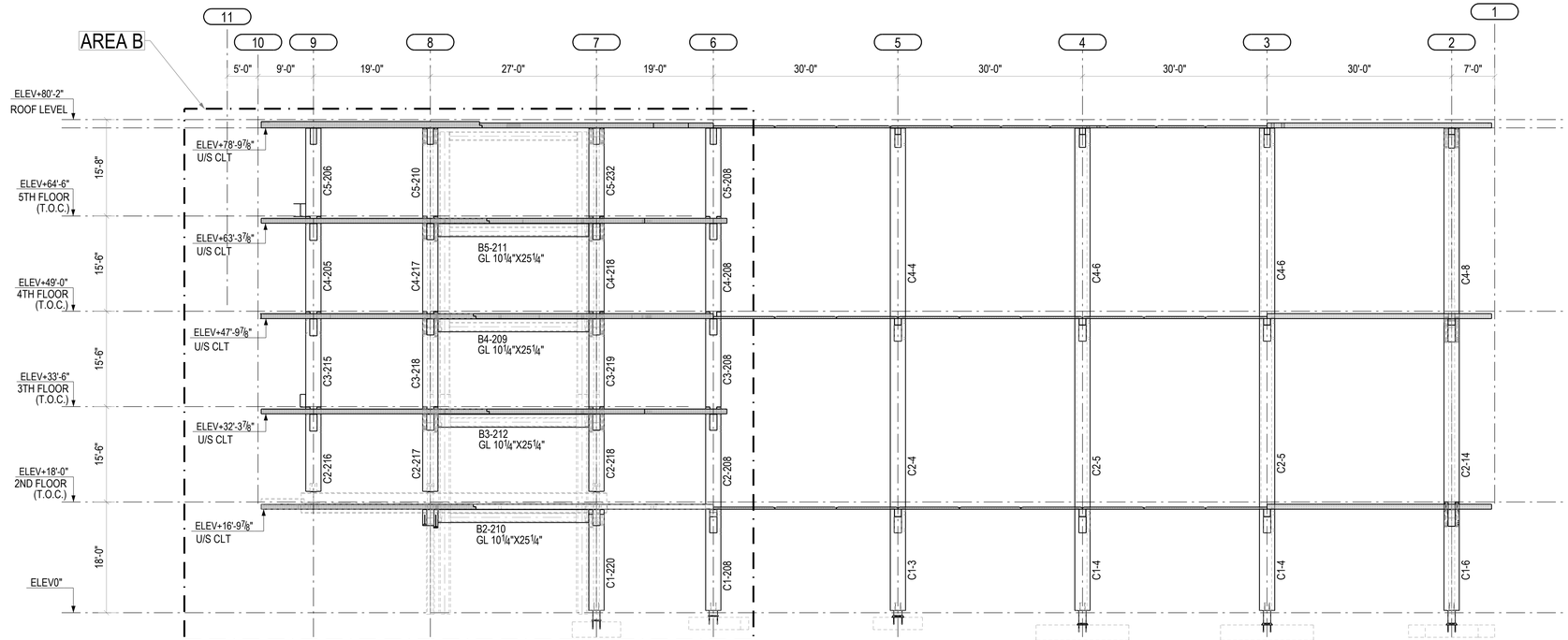

ELEVATION ALONG GRIDLINE C

REV	DATE	REMARKS
0	04/30/2020	IFF
L	03/04/2020	Area B OFA
K	02/05/2020	Area B OFA
J	01/17/2020	Area A OFA glulam
I	12/11/2019	Area A OFA
H	11/18/2019	Area B Geo.
G	11/15/2019	Area B Geo.
F	10/22/2019	Area B Geo.

Ref Dwg:

ISSUED IFF

DATE: 04/30/2020

STRUCTURLAM
MASS TIMBER CORPORATION
Intelligence In Wood

DATE 18/Jul/2019	SHEET	REV.	PROJECT
BY CMI	SL19	0	BORREGAS
DWG TITLE ELEVATION ALONG GRIDLINE B & C			Job# 25991

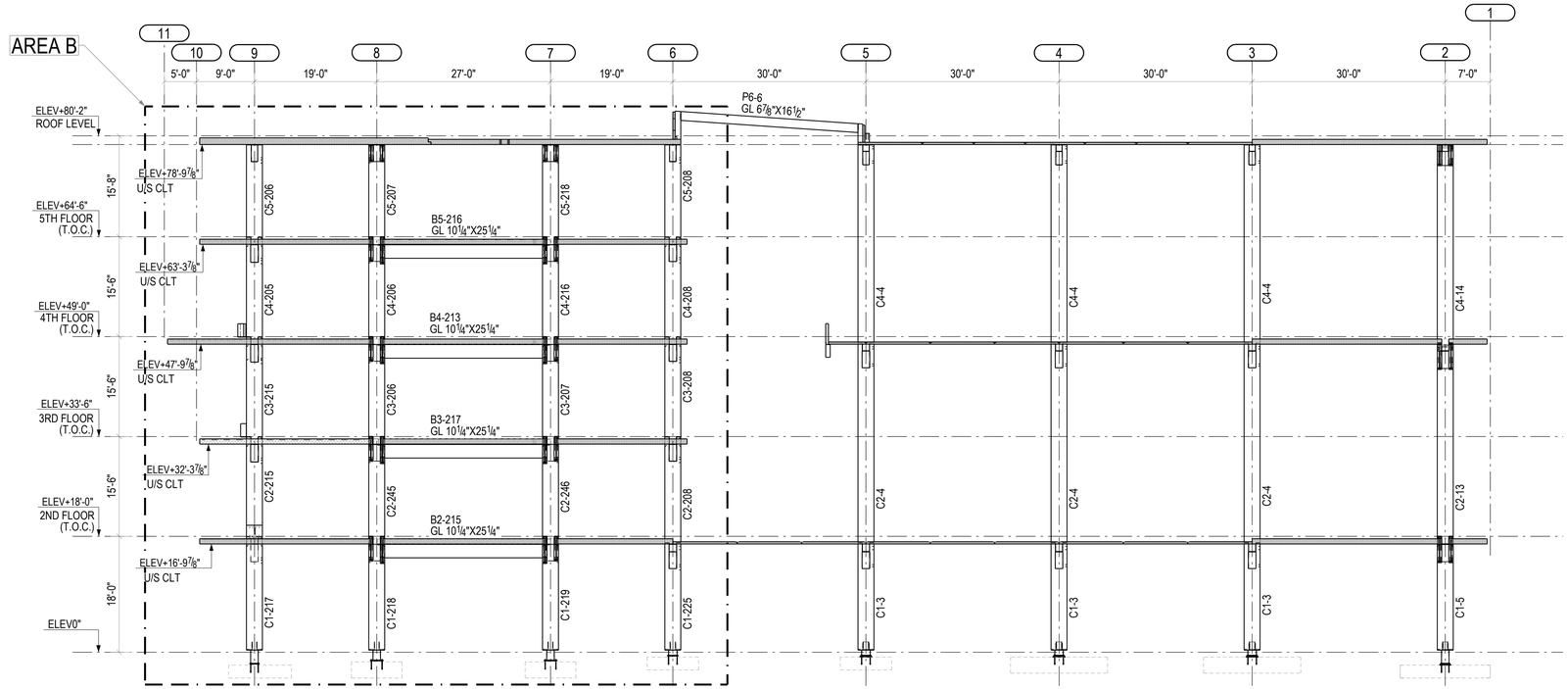

ELEVATION ALONG GRIDLINE D

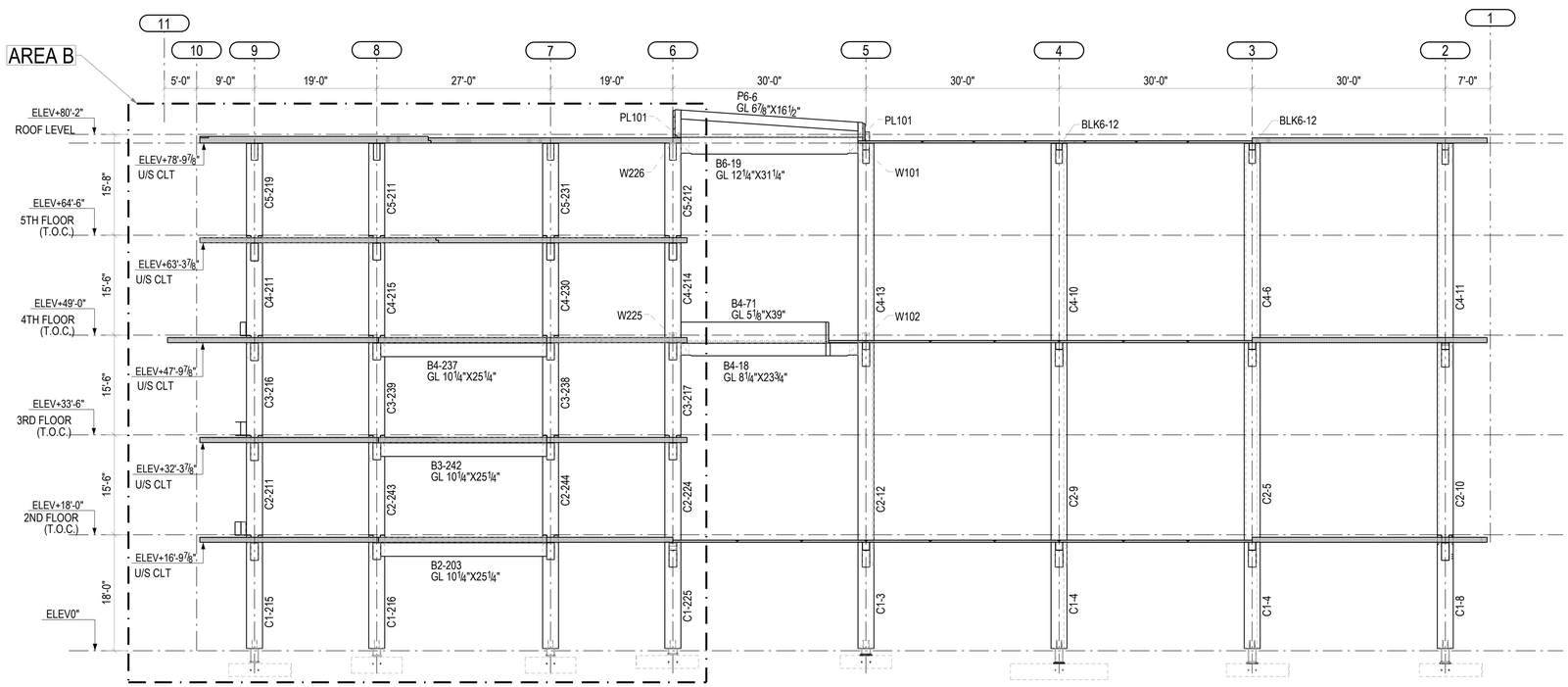

ELEVATION ALONG GRIDLINE E

REV	DATE	REMARKS
0	04/30/2020	IFF
L	03/04/2020	Area B OFA
K	02/05/2020	Area B OFA
J	01/17/2020	Area A OFA glulam
I	12/11/2019	Area A OFA
H	11/18/2019	Area B Geo.
G	11/15/2019	Area B Geo.
F	10/22/2019	Area B Geo.

Ref Dwg:

ISSUED IFF

DATE: 04/30/2020

STRUCTURLAM
MASS TIMBER CORPORATION
Intelligence In Wood

DATE 18/Jul/2019	SHEET	REV.	PROJECT
BY CMI	SL20	0	BORREGAS
DWG TITLE ELEVATION ALONG GRIDLINE D & E			Job# 25991

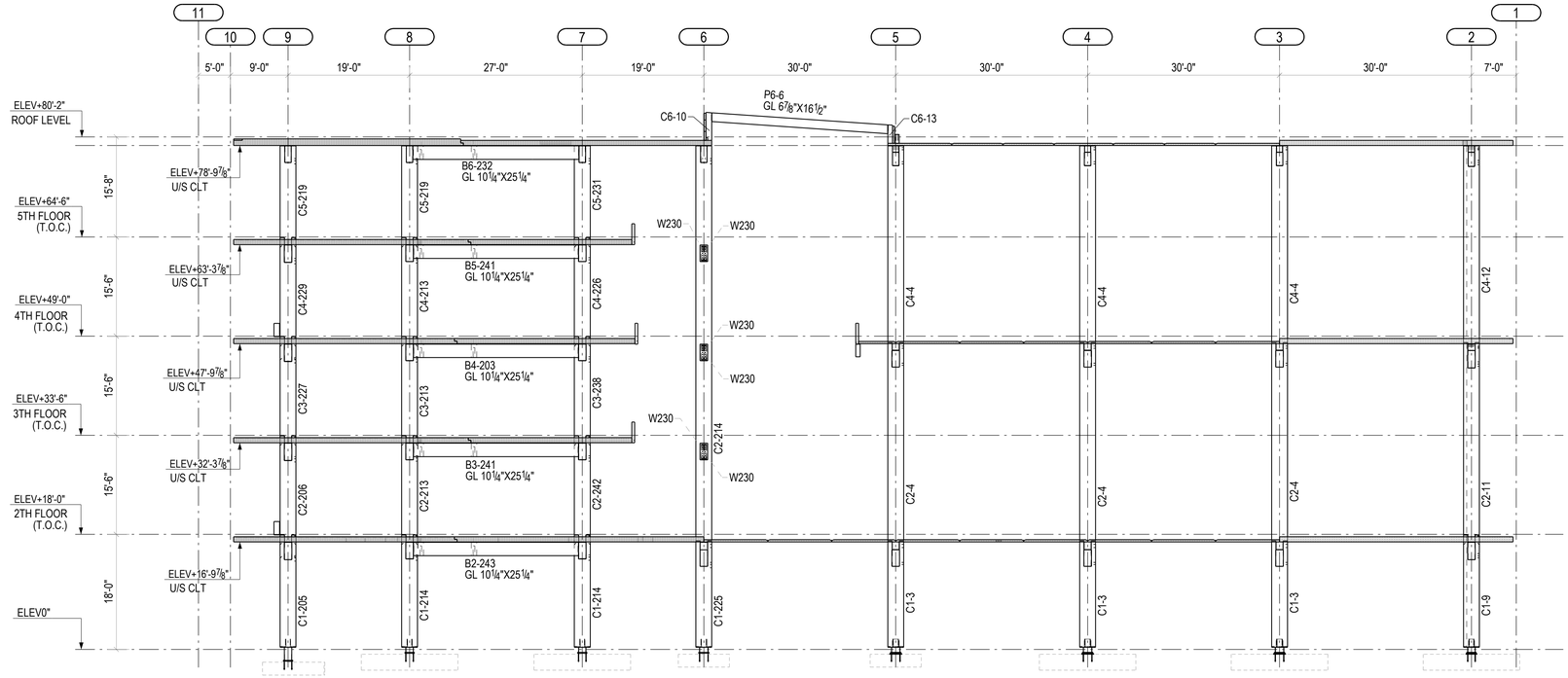

ELEVATION ALONG GRIDLINE F

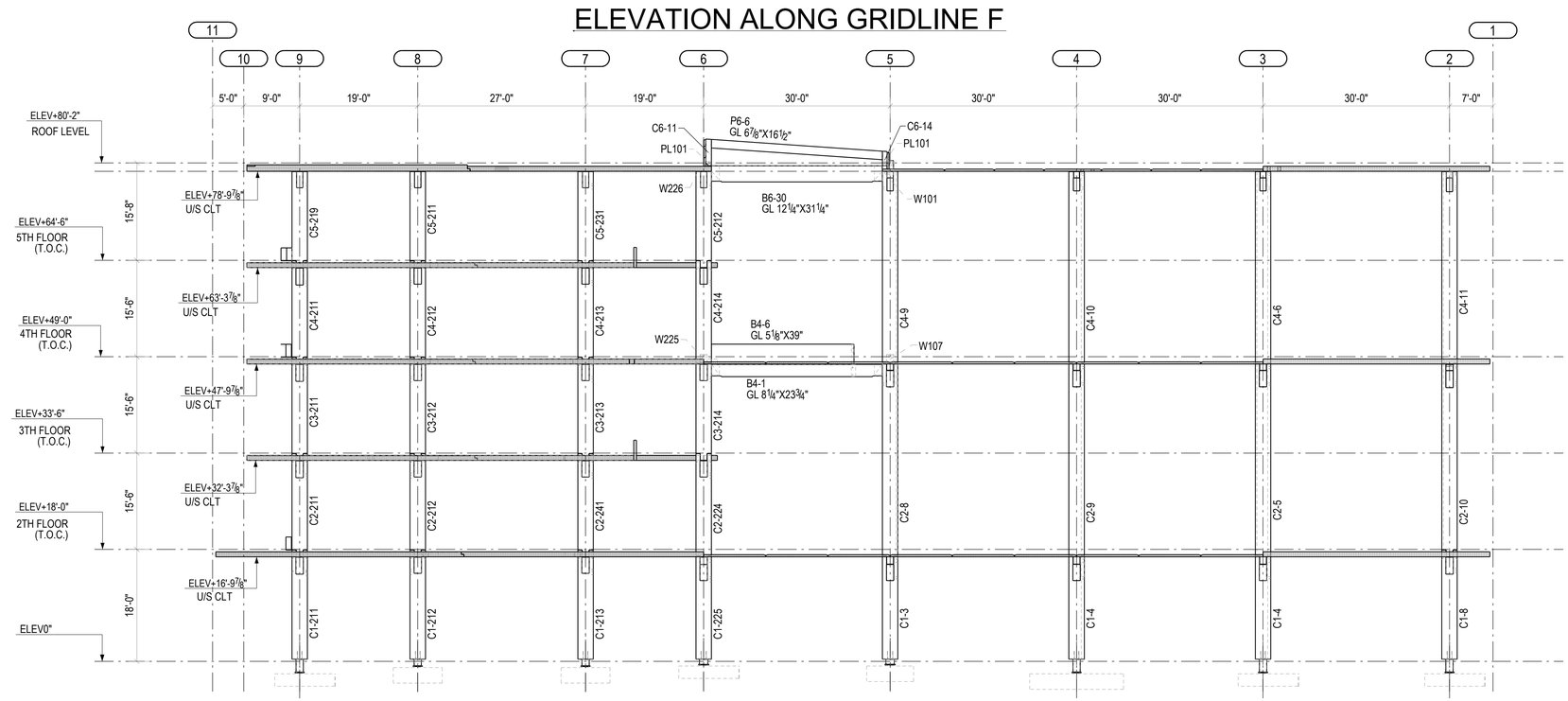

ELEVATION ALONG GRIDLINE G

REV	DATE	REMARKS
0	04/30/2020	IFF
L	03/04/2020	Area B OFA
K	02/05/2020	Area B OFA
J	01/17/2020	Area A OFA glulam
I	12/11/2019	Area A OFA
H	11/18/2019	Area B Geo.
G	11/15/2019	Area B Geo.
F	10/22/2019	Area B Geo.

Ref Dwg:

ISSUED IFF

DATE: 04/30/2020

STRUCTURLAM
MASS TIMBER CORPORATION
Intelligence In Wood

DATE 18/Jul/2019

BY CMI

SHEET SL21

REV. 0

DWG TITLE ELEVATION ALONG GRIDLINE F & G

PROJECT

BORREGAS

Job# 25991

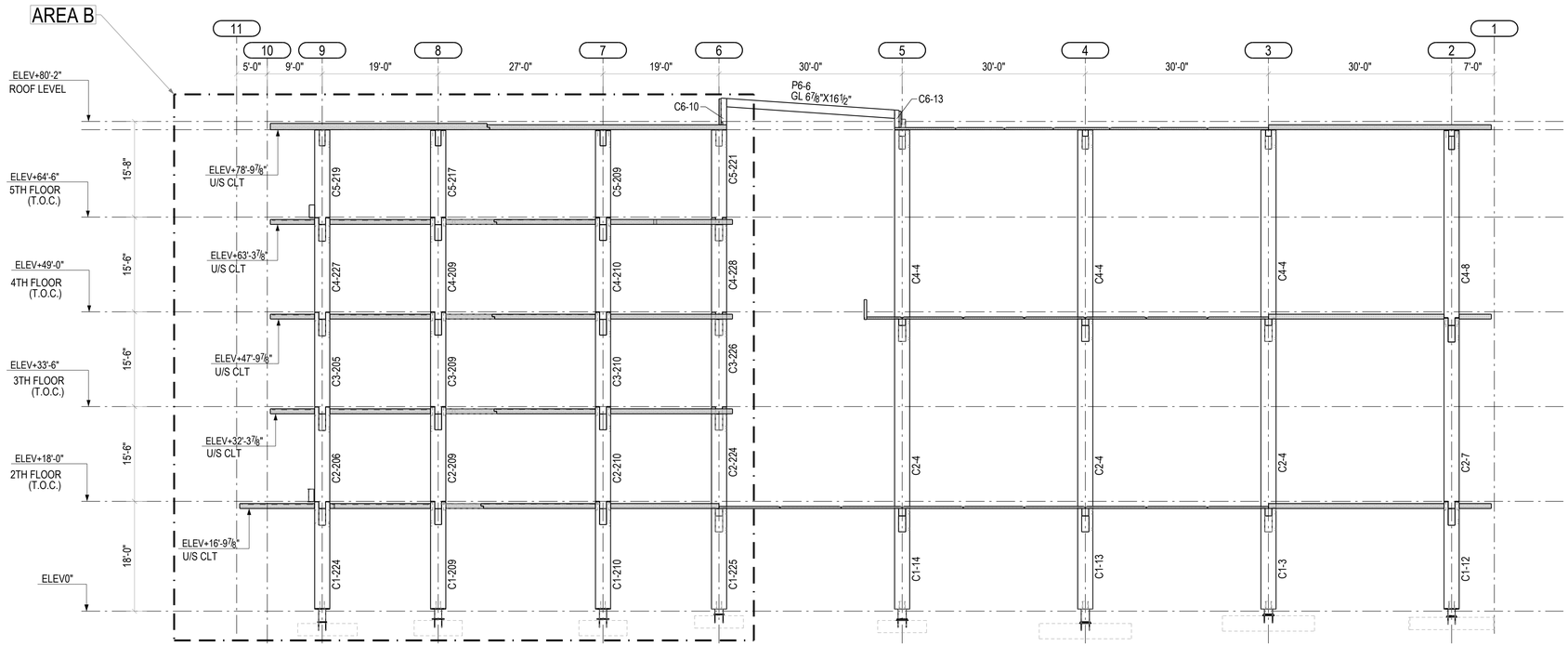

ELEVATION ALONG GRIDLINE H

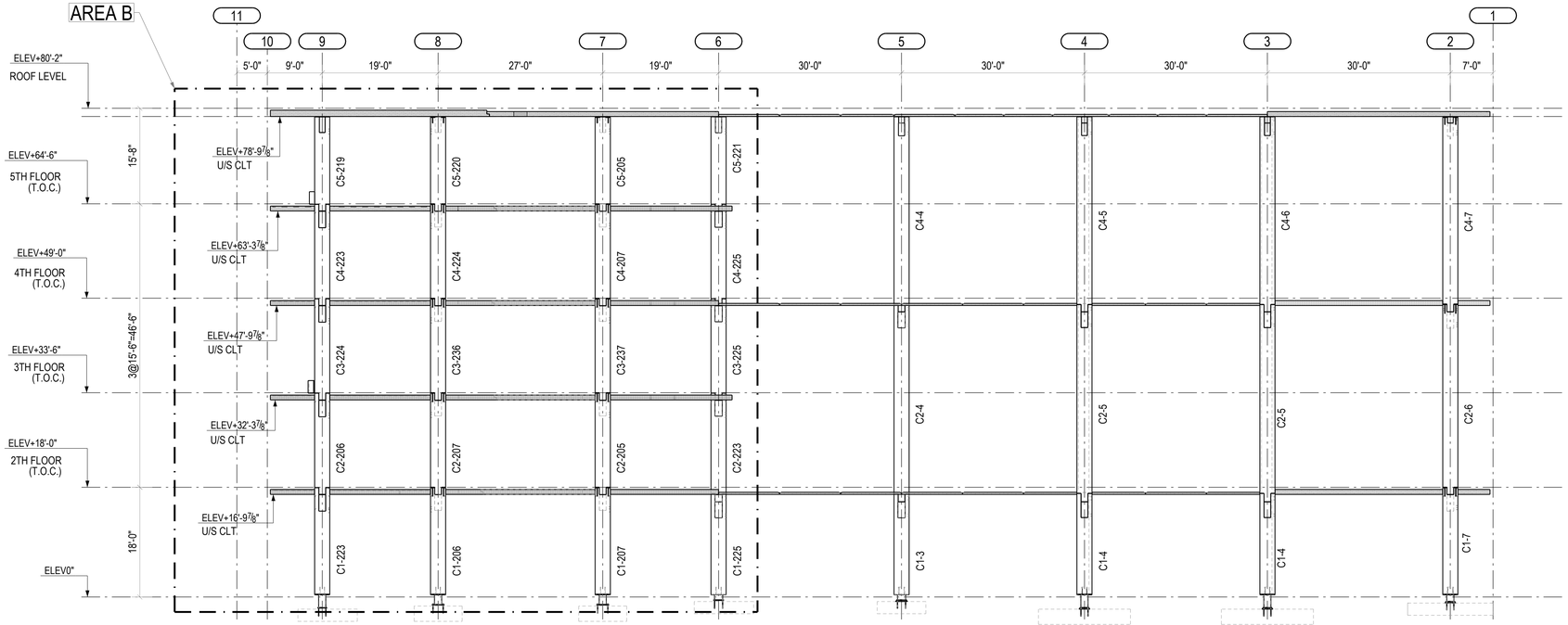

ELEVATION ALONG GRIDLINE J

REV	DATE	REMARKS
0	04/30/2020	IFF
L	03/04/2020	Area B OFA
K	02/05/2020	Area B OFA
J	01/17/2020	Area A OFA glulam
I	12/11/2019	Area A OFA
H	11/18/2019	Area B Geo.
G	11/15/2019	Area B Geo.
F	10/22/2019	Area B Geo.

Ref Dwg:

ISSUED IFF

DATE: 04/30/2020

STRUCTURLAM
MASS TIMBER CORPORATION
Intelligence In Wood

DATE 18/Jul/2019	SHEET	REV.	PROJECT
BY CMI	SL22	0	BORREGAS
DWG TITLE ELEVATION ALONG GRIDLINE H & J			Job# 25991

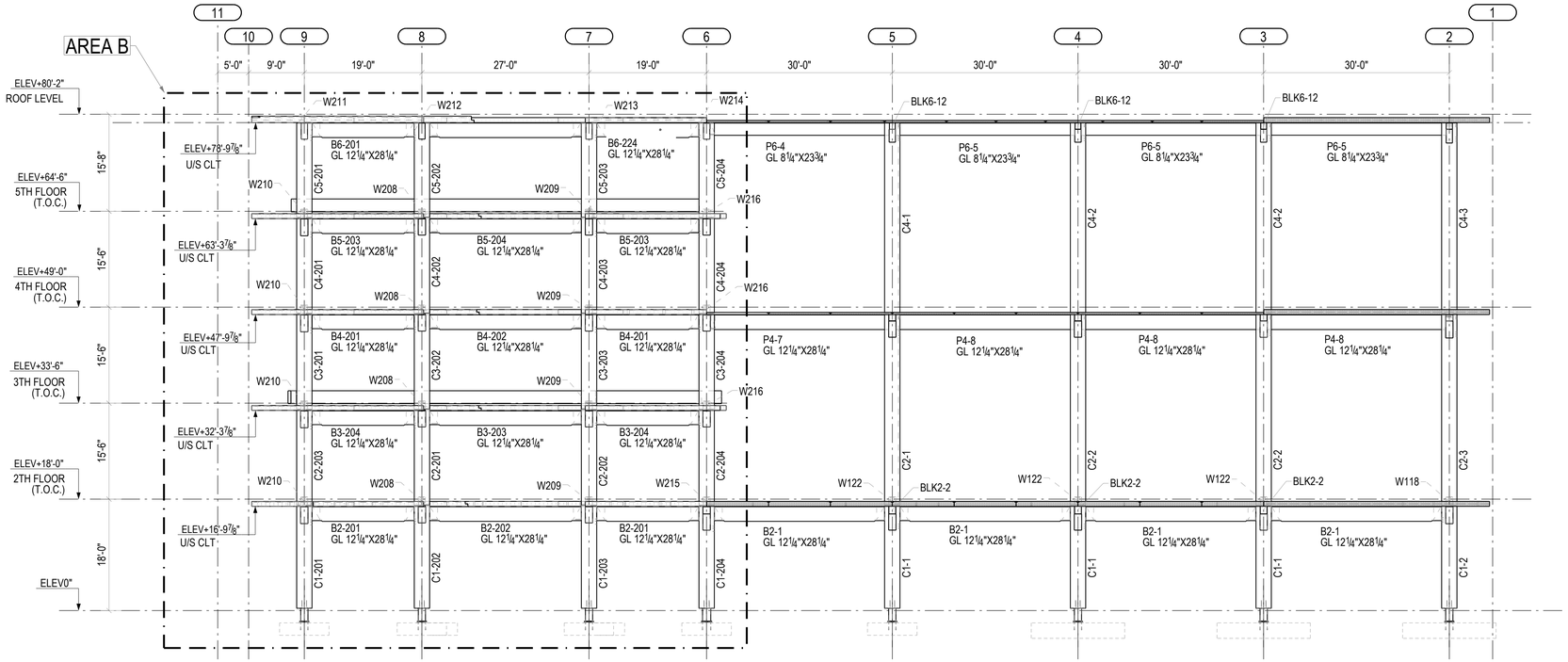

ELEVATION ALONG GRIDLINE K

REV	DATE	REMARKS
0	04/30/2020	IFF
L	03/04/2020	Area B OFA
K	02/05/2020	Area B OFA
J	01/17/2020	Area A OFA glulam
I	12/11/2019	Area A OFA
H	11/18/2019	Area B Geo.
G	11/15/2019	Area B Geo.
F	10/22/2019	Area B Geo.

Ref Dwg:

ISSUED IFF

DATE: 04/30/2020

STRUCTURLAM
MASS TIMBER CORPORATION
Intelligence In Wood

DATE 18/Jul/2019

BY CMI

SHEET SL23

REV. 0

DWG TITLE ELEVATION ALONG GRIDLINE K

PROJECT

BORREGAS

Job# 25991

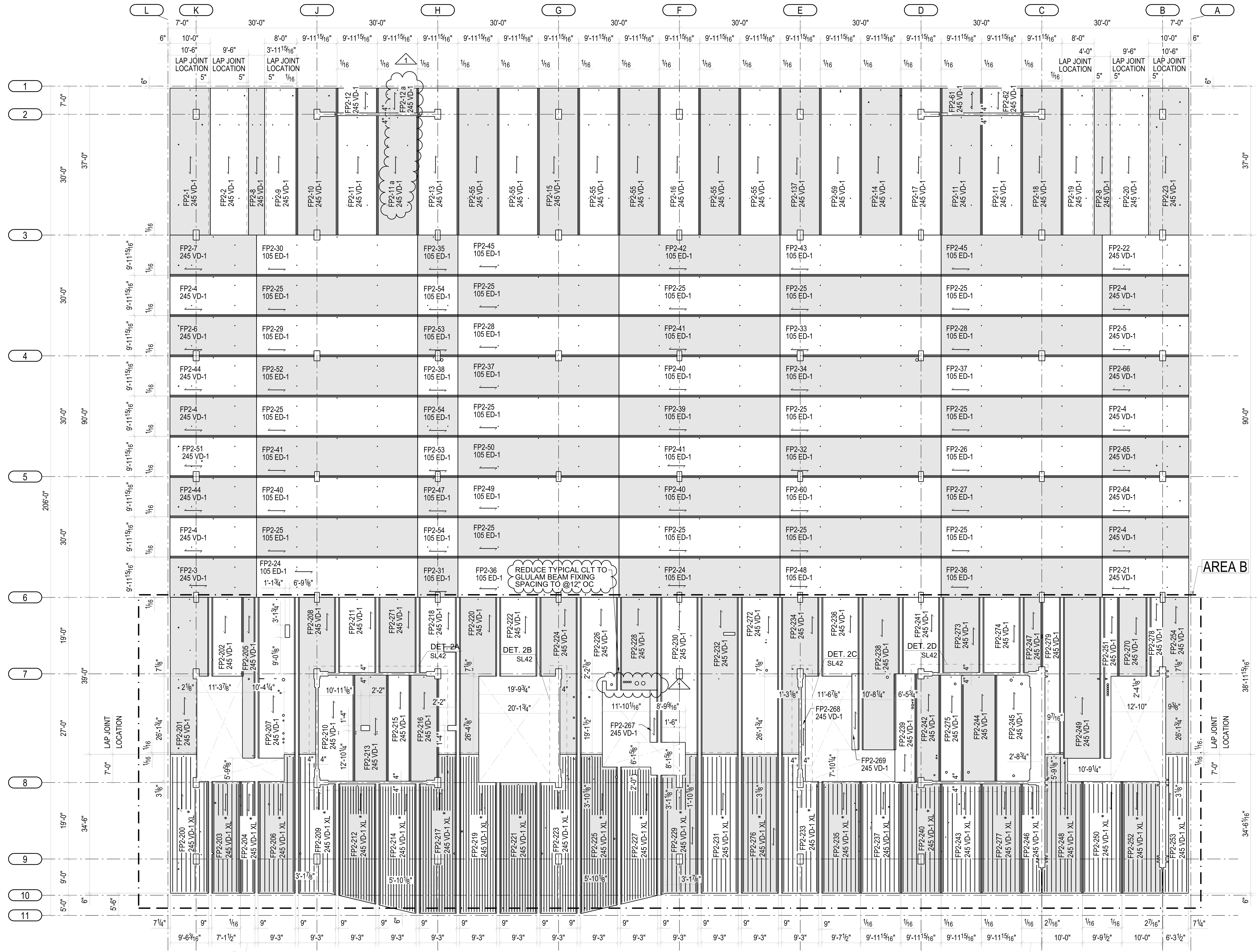

LEVEL 2 CLT HATCH PLAN

U/S OF CLT = EL. + 16'-9 7/8" (U.N.O.)

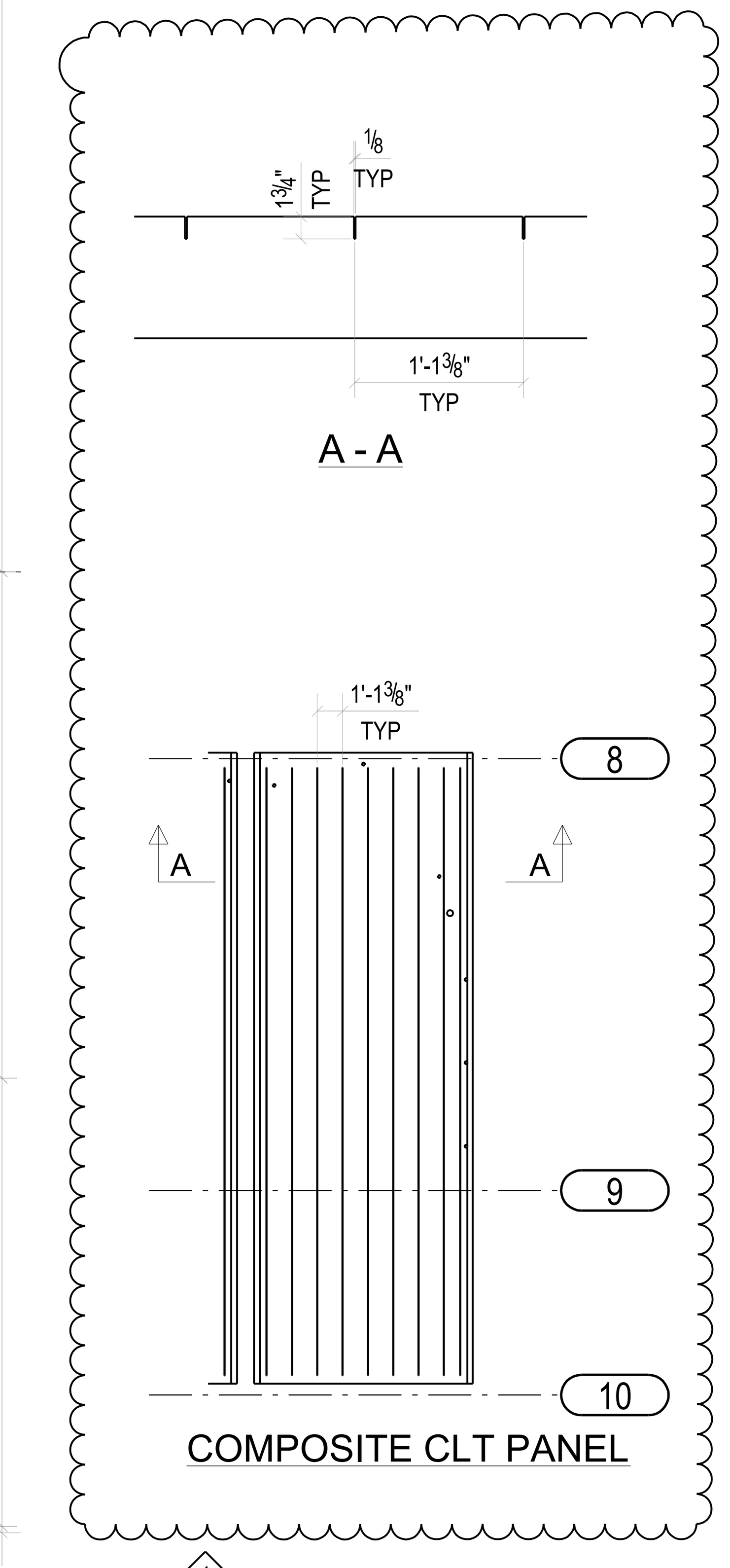

COMPOSITE CLT PANEL

CLT SCHEDULE

TYPE	NAME	QTY	THICKNESS	WIDTH	LENGTH	WEIGHT(LB)	TOTAL WEIGHT
245 VD-1 XL	FP2-200	1	9 5/8"	9'-6 3/16"	34'-11 1/16"	7753	7753
245 VD-1 XL	FP2-203	1	9 5/8"	7'-1 1/2"	27'-9 1/8"	5034	5034
245 VD-1 XL	FP2-204	1	9 5/8"	3'-7 7/16"	27'-9 1/8"	2542	2542
245 VD-1 XL	FP2-206	1	9 5/8"	9'-3"	34'-11 1/16"	7040	7040
245 VD-1 XL	FP2-209	1	9 5/8"	9'-3"	35'-3 1/4"	7067	7067
245 VD-1 XL	FP2-212	1	9 5/8"	9'-3"	29'-10 3/4"	6790	6790
245 VD-1 XL	FP2-214	1	9 5/8"	9'-3"	32'-2"	7351	7351
245 VD-1 XL	FP2-217	1	9 5/8"	9'-3"	39'-11 1/16"	8290	8290
245 VD-1 XL	FP2-219	1	9 5/8"	9'-3"	39'-11 1/16"	8541	8541
245 VD-1 XL	FP2-221	1	9 5/8"	9'-3"	32'-6"	7661	7661
245 VD-1 XL	FP2-223	1	9 5/8"	9'-3"	39'-11 1/16"	8273	8273
245 VD-1 XL	FP2-225	1	9 5/8"	9'-3"	39'-11 1/16"	8798	8798
245 VD-1 XL	FP2-227	1	9 5/8"	9'-3"	34'-0 7/8"	7666	7666
245 VD-1 XL	FP2-229	1	9 5/8"	9'-3"	35'-3 1/4"	7142	7142
245 VD-1 XL	FP2-231	1	9 5/8"	9'-3"	34'-11 1/16"	8196	8196
245 VD-1 XL	FP2-233	1	9 5/8"	9'-3"	34'-11 1/16"	7134	7134
245 VD-1 XL	FP2-235	1	9 5/8"	9'-7 1/2"	27'-9 1/8"	6819	6819
245 VD-1 XL	FP2-237	1	9 5/8"	9'-11 15/16"	27'-9 1/8"	7080	7080
245 VD-1 XL	FP2-240	1	9 5/8"	9'-11 15/16"	27'-7 1/8"	6836	6836
245 VD-1 XL	FP2-243	1	9 5/8"	9'-11 15/16"	27'-2"	6934	6934
245 VD-1 XL	FP2-246	1	9 5/8"	4'-10 3/4"	27'-2"	3001	3001
245 VD-1 XL	FP2-248	1	9 5/8"	10'-0"	34'-10 15/16	7677	7677
245 VD-1 XL	FP2-250	1	9 5/8"	9'-9 3/8"	27'-9 1/8"	6939	6939
245 VD-1 XL	FP2-252	1	9 5/8"	10'-0"	27'-9 1/8"	6718	6718
245 VD-1 XL	FP2-253	1	9 5/8"	6'-3 1/2"	34'-11 1/16"	5094	5094
245 VD-1 XL	FP2-276	1	9 5/8"	9'-3"	34'-11 1/16"	8196	8196
245 VD-1 XL	FP2-277	1	9 5/8"	9'-11 15/16"	27'-2"	6937	6937
245 VD-1	FP2-1	1	9 5/8"	10'-0"	36'-5 15/16"	9040	9040
245 VD-1	FP2-2	1	9 5/8"	9'-11"	36'-5 15/16"	8909	8909
245 VD-1	FP2-3	1	9 5/8"	9'-11 15/16"	21'-5 15/16"	5473	5473
245 VD-1	FP2-4	6	9 5/8"	9'-11 15/16"	21'-5 15/16"	5499	32995
245 VD-1	FP2-5	1	9 5/8"	9'-11 15/16"	21'-5 15/16"	5451	5451
245 VD-1	FP2-6	1	9 5/8"	9'-11 15/16"	21'-5 15/16"	5451	5451
245 VD-1	FP2-7	1	9 5/8"	9'-11 15/16"	21'-5 15/16"	5463	5463
245 VD-1	FP2-8	2	9 5/8"	4'-10"	36'-5 15/16"	4141	8282
245 VD-1	FP2-9	1	9 5/8"	8'-0"	36'-5 15/16"	7288	7288
245 VD-1	FP2-10	1	9 5/8"	9'-11 15/16"	36'-5 15/16"	9088	9088
245 VD-1	FP2-11	4	9 5/8"	9'-11 15/16"	29'-7 15/16"	7588	30353
245 VD-1	FP2-12	2	9 5/8"	9'-11 15/16"	6'-2"	1577	3155
245 VD-1	FP2-13	1	9 5/8"	9'-11 15/16"	36'-5 15/16"	9099	9099
245 VD-1	FP2-14	1	9 5/8"	9'-11 15/16"	36'-5 15/16"	9335	9335
245 VD-1	FP2-15	1	9 5/8"	9'-11 15/16"	36'-5 15/16"	9192	9192
245 VD-1	FP2-16	1	9 5/8"	9'-11 15/16"	36'-5 15/16"	9201	9201
245 VD-1	FP2-17	1	9 5/8"	9'-11 15/16"	36'-5 15/16"	9098	9098
245 VD-1	FP2-18	1	9 5/8"	9'-11 15/16"	36'-5 15/16"	9089	9089
245 VD-1	FP2-19	1	9 5/8"	8'-0"	36'-5 15/16"	7287	7287
245 VD-1	FP2-20	1	9 5/8"	9'-11"	36'-5 15/16"	8911	8911
245 VD-1	FP2-21	1	9 5/8"	9'-11 15/16"	21'-5 15/16"	5474	5474
245 VD-1	FP2-22	1	9 5/8"	9'-11 15/16"	21'-5 15/16"	5463	5463
245 VD-1	FP2-23	1	9 5/8"	10'-0"	36'-5 15/16"	9040	9040
245 VD-1	FP2-44	2	9 5/8"	9'-11 15/16"	21'-5 15/16"	5451	10902
245 VD-1	FP2-51	1	9 5/8"	9'-11 15/16"	21'-5 15/16"	5450	5450
245 VD-1	FP2-55	6	9 5/8"	9'-11 15/16"	36'-5 15/16"	9336	56019
245 VD-1	FP2-59	1	9 5/8"	9'-11 15/16"	36'-5 15/16"	9336	9336
245 VD-1	FP2-61	1	9 5/8"	9'-11 15/16"	6'-2"	1577	1577
245 VD-1	FP2-62	1	9 5/8"	9'-11 15/16"	6'-2"	1577	1577
245 VD-1	FP2-64	1	9 5/8"	9'-11 15/16"	21'-5 15/16"	5451	5451
245 VD-1	FP2-65	1	9 5/8"	9'-11 15/16"	21'-5 15/16"	5450	5450
245 VD-1	FP2-66	1	9 5/8"	9'-11 15/16"	21'-5 15/16"	5451	5451
245 VD-1	FP2-137	1	9 5/8"	9'-11 15/16"	36'-5 15/16"	9191	9191
245 VD-1	FP2-201	1	9 5/8"	9'-6 3/16"	38'-11 7/8"	7893	7893
245 VD-1	FP2-202	1	9 5/8"	7'-7 7/16"	19'-7 1/16"	3814	3814
245 VD-1	FP2-205	1	9 5/8"	3'-1 9/16"	39'-11 3/16"	3174	3174
245 VD-1	FP2-207	1	9 5/8"	9'-3"	39'-11 3/16"	9240	9240
245 VD-1	FP2-208	1	9 5/8"	9'-3"	38'-11 7/8"	6502	6502
245 VD-1	FP2-210	1	9 5/8"	8'-10 1/8"	26'-4"	5897	5897
245 VD-1	FP2-211	1	9 5/8"	9'-3"	18'-7 15/16"	4415	4415
245 VD-1	FP2-213	1	9 5/8"	8'-3 7/16"	26'-4"	5503	5503
245 VD-1	FP2-215	1	9 5/8"	5'-7 7/16"	26'-4"	3774	3774
245 VD-1	FP2-216	1	9 5/8"	6'-10 13/16"	26'-4"	4581	4581
245 VD-1	FP2-218	1	9 5/8"	9'-3"	38'-11 7/8"	6481	6481
245 VD-1	FP2-220	1	9 5/8"	9'-3"	38'-11 7/8"	6991	6991
245 VD-1	FP2-222	1	9 5/8"	9'-3"	19'-7 1/16"	4634	4634
245 VD-1	FP2-224	1	9 5/8"	9'-3"	38'-11 7/8"	6598	6598
245 VD-1	FP2-226	1	9 5/8"	9'-3"	38'-11 7/8"	7589	7589
245 VD-1	FP2-228	1	9 5/8"	9'-3"	23'-0 3/16"	5397	5397
245 VD-1	FP2-230	1	9 5/8"	9'-3"	38'-11 7/8"	8599	8599
245 VD-1	FP2-232	1	9 5/8"	9'-3"	38'-11 7/8"	9121	9121
245 VD-1	FP2-234	1	9 5/8"	9'-3"	38'-11 7/8"	6597	6597
245 VD-1	FP2-236	1	9 5/8"	9'-3"	19'-7 1/16"	4606	4606
245 VD-1	FP2-238	1	9 5/8"	9'-3"	37'-10 9/16"	8415	8415
245 VD-1	FP2-239	1	9 5/8"	5'-2 3/16"	26'-10 3/4"	3546	3546
245 VD-1	FP2-241	1	9 5/8"	9'-3"	18'-11 15/16	4359	4359
245 VD-1	FP2-242	1	9 5/8"	5'-11 5/16"	26'-10 11/16	3896	3896
245 VD-1	FP2-244	1	9 5/8"	8'-3 1/2"	26'-4"	5581	5581
245 VD-1	FP2-245	1	9 5/8"	8'-8 5/16"	26'-4"	5813	5813
245 VD-1	FP2-247	1	9 5/8"	4'-7 7/16"	18'-7 15/16"	2126	2126
245 VD-1	FP2-249	1	9 5/8"	9'-3"	39'-11 11/16	9453	9453
245 VD-1	FP2-251	1	9 5/8"	3'-7 1/2"	39'-11 11/16	2700	2700
245 VD-1	FP2-254	1	9 5/8"	6'-4 11/16"	38'-11 7/8"	5914	5914
245 VD-1	FP2-267	1	9 5/8"	1'-11 1/16"	12'-11 13/16	633	633
245 VD-1	FP2-268	1	9 5/8"	0'-11 1/8"	26'-8 13/16"	588	588
245 VD-1	FP2-269	1	9 5/8"	1'-9 1/2"	18'-10 5/8"	858	858
245 VD-1	FP2-270	1	9 5/8"	7'-1 1/2"	19'-7 1/16"	3564	3564
245 VD-1	FP2-271	1	9 5/8"	9'-3"	18'-7 15/16"	4415	4415
245 VD-1	FP2-272	1	9 5/8"	9'-3"	38'-11 7/8"	9167	9167
245 VD-1	FP2-273	1	9 5/8"	9'-3"	18'-7 15/16"	4415	4415
245 VD-1	FP2-274	1	9 5/8"	9'-3"	18'-7 15/16"	4415	4415
245 VD-1	FP2-275	1	9 5/8"	5'-7 5/16"	26'-4"	3755	3755
245 VD-1	FP2-278	1	9 5/8"	3'-1 3/8"	19'-7 1/16"	1485	1485
245 VD-1	FP2-279	1	9 5/8"	4'-7 7/16"	38'-11 15/16	4105	4105
105 ED-1	FP2-24	2	4 1/8"	9'-11 15/16"	39'-11 15/16	4365	8729
105 ED-1	FP2-25	14	4 1/8"	9'-11 15/16"	39'-11 15/16	4357	60991
105 ED-1	FP2-26	1	4 1/8"	9'-11 15/16"	39'-11 15/16	4341	4341
105 ED-1	FP2-27	1	4 1/8"	9'-11 15/16"	39'-11 15/16	4341	4341
105 ED-1	FP2-28	2	4 1/8"	9'-11 15/16"	39'-11 15/16	4337	8674
105 ED-1	FP2-29	1	4 1/8"	9'-11 15/16"	39'-11 15/16	4337	4337
105 ED-1	FP2-30	1	4 1/8"	9'-11 15/16"	39'-11 15/16	4361	4361
105 ED-1	FP2-31	1	4 1/8"	9'-11 15/16"	9'-11 15/16"	1078	1078
105 ED-1	FP2-32	1	4 1/8"	9'-11 15/16"	39'-11 15/16	4325	4325
105 ED-1	FP2-33	1	4 1/8"	9'-11 15/16"	39'-11 15/16	4321	4321
105 ED-1	FP2-34	1	4 1/8"	9'-11 15/16"	39'-11 15/16	4317	4317
105 ED-1	FP2-35	1	4 1/8"	9'-11 15/16"	9'-11 15/16"	1078	1078
105 ED-1	FP2-36	2	4 1/8"	9'-11 15/16"	39'-11 15/16	4365	8729
105 ED-1	FP2-37	2	4 1/8"	9'-11 15/16"	39'-11 15/16	4337	8674
105 ED-1	FP2-38	1	4 1/8"	9'-11 15/16"	9'-11 15/16"	1069	1069
105 ED-1	FP2-39	1	4 1/8"	9'-11 15/16"	39'-11 15/16	4355	4355
105 ED-1	FP2-40	3	4 1/8"	9'-11 15/16"	39'-11 15/16	4341	13022
105 ED-1	FP2-41	3	4 1/8"	9'-11 15/16"	39'-11 15/16	4341	13022
105 ED-1	FP2-42	1	4 1/8"	9'-11 15/16"	39'-11 15/16	4365	4365
105 ED-1	FP2-43	1	4 1/8"	9'-11 15/16"	39'-11 15/16	4344	4344
105 ED-1	FP2-45	2	4 1/8"	9'-11 15/16"	39'-11 15/16	4361	8721
105 ED-1	FP2-47	1	4 1/8"	9'-11 15/16"	9'-11 15/16"	1073	1073
105 ED-1	FP2-48	1	4 1/8"	9'-11 15/16"	39'-11 15/16	4348	4348
105 ED-1	FP2-49	1	4 1/8"	9'-11 15/16"	39'-11 15/16	4341	4341
105 ED-1	FP2-50	1	4 1/8"	9'-11 15/16"	39'-11 15/16	4341	4341
105 ED-1	FP2-52	1	4 1/8"	9'-11 15/16"	39'-11 15/16	4337	4337
105 ED-1	FP2-53	2	4 1/8"	9'-11 15/16"	9'-11 15/16"	1073	2145
105 ED-1	FP2-54	3	4 1/8"	9'-11 15/16"	9'-11 15/16"	1089	3266
105 ED-1	FP2-60	1	4 1/8"	9'-11 15/16"	39'-11 15/16	4325	4325
							936023

NOTES:

1. * - DENOTES COMPOSITE CLT PANEL

REV	DATE	REMARKS
1	12/31/2020	SMTC IFF layout revisions
0	04/30/2020	IFF
K	03/04/2020	Area B OFA
J	02/05/2020	Area B OFA
I	01/17/2020	Area A OFA glulam
H	12/11/2019	Area A OFA
E	11/18/2019	Area B Geo.
D	11/08/2019	Area B Geo.

Ref Dwg: S101

ISSUED SMTC IFF layo

DATE: 12/31/2020

STRUCTURLAM
MASS TIMBER CORPORATION
Intelligence In Wood

DATE 31/Jul/2019

BY VCO

DWG TITLE LEVEL 2 CLT HATCH PLAN

SHEET SL24

REV. 1

PROJECT BORREGAS

Job# 25991

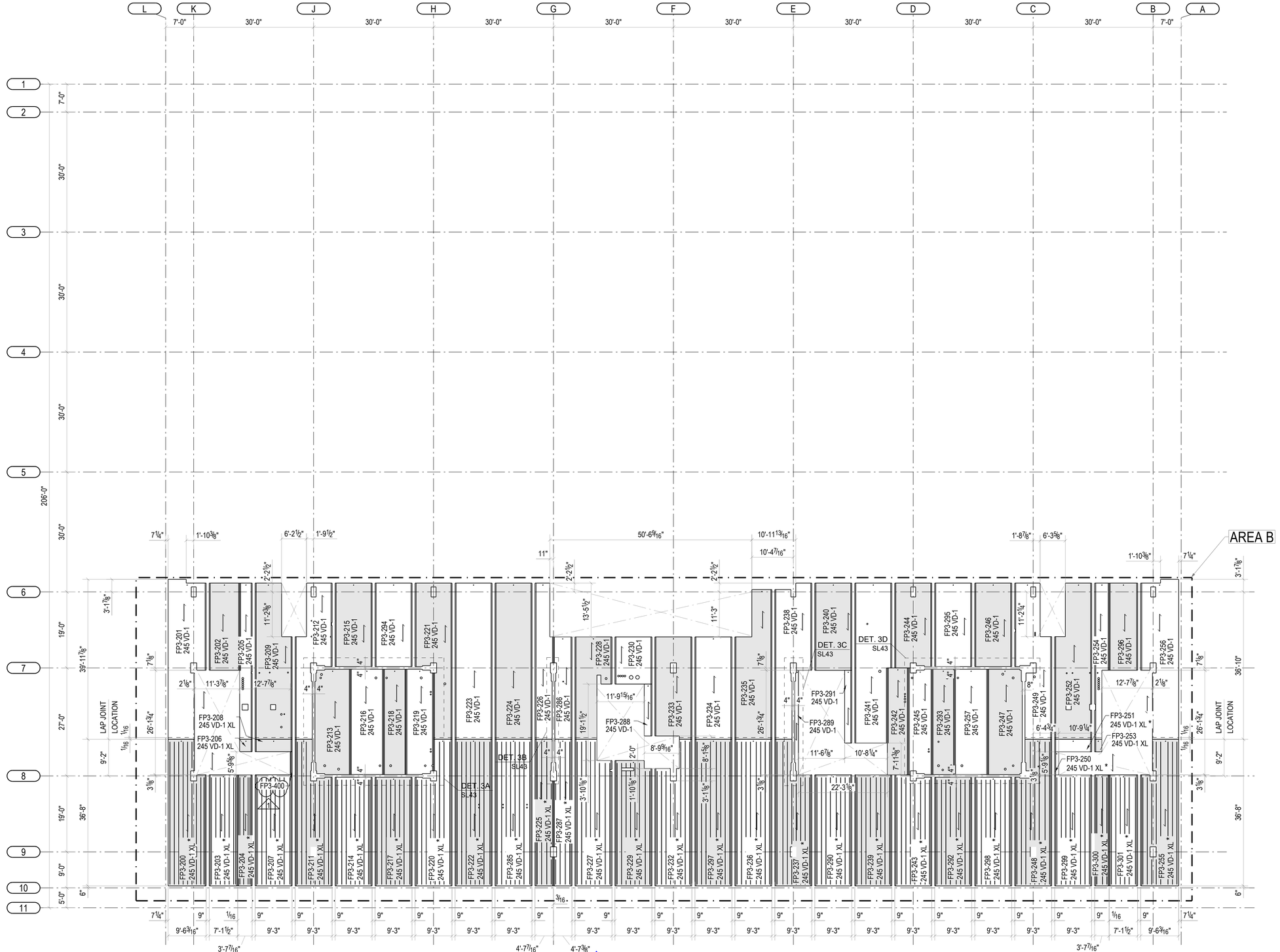

LEVEL 3 CLT HATCH PLAN

U/S OF CLT = EL. + 32'-3 7/8" (U.N.O.)

NOTES:

1. * - DENOTES COMPOSITE CLT PANEL

CLT SCHEDULE

245 VD-1	FP3-200	1	3 5/8"	9'-6 3/16"	37'-1 1/16"	8121	8121
245 VD-1	FP3-201	1	3 5/8"	7'-1 1/2"	27'-8 5/8"	3040	3040
245 VD-1	FP3-202	1	3 5/8"	6'-7 7/16"	27'-8 1/8"	2548	2548
245 VD-1	FP3-203	1	3 5/8"	2'-1 1/2"	2'-6 5/16"	265	265
245 VD-1	FP3-207	1	3 5/8"	6'-2"	27'-8 1/8"	6553	6553
245 VD-1	FP3-208	1	3 5/8"	9'-0"	2'-6 5/16"	784	784
245 VD-1	FP3-211	1	3 5/8"	9'-0"	37'-1 1/16"	7299	7299
245 VD-1	FP3-214	1	3 5/8"	9'-0"	27'-2"	6412	6412
245 VD-1	FP3-217	1	3 5/8"	9'-0"	27'-2"	6414	6414
245 VD-1	FP3-220	1	3 5/8"	9'-0"	37'-1 1/16"	7329	7329
245 VD-1	FP3-222	1	3 5/8"	9'-0"	37'-1 1/16"	8703	8703
245 VD-1	FP3-225	1	3 5/8"	4'-7 7/16"	37'-1 1/16"	4153	4153
245 VD-1	FP3-227	1	3 5/8"	9'-0"	37'-1 1/16"	8172	8172
245 VD-1	FP3-229	1	3 5/8"	9'-0"	37'-1 5/8"	7247	7247
245 VD-1	FP3-232	1	3 5/8"	9'-0"	37'-1 1/16"	7308	7308
245 VD-1	FP3-236	1	3 5/8"	9'-0"	37'-1 1/16"	8707	8707
245 VD-1	FP3-237	1	3 5/8"	9'-0"	37'-1 1/16"	7371	7371
245 VD-1	FP3-239	1	3 5/8"	9'-0"	27'-8 1/8"	6553	6553
245 VD-1	FP3-243	1	3 5/8"	9'-0"	27'-8 1/8"	6325	6325
245 VD-1	FP3-248	1	3 5/8"	9'-0"	37'-1 1/16"	7794	7794
245 VD-1	FP3-250	1	3 5/8"	1'-2 1/4"	9'-0"	141	141
245 VD-1	FP3-251	1	3 5/8"	9'-0"	2'-6 13/16"	794	794
245 VD-1	FP3-253	1	3 5/8"	1'-3 1/2"	2'-6 13/16"	153	153
245 VD-1	FP3-255	1	3 5/8"	9'-6 3/16"	37'-1 1/16"	8121	8121
245 VD-1	FP3-285	1	3 5/8"	9'-0"	37'-1 1/16"	8701	8701
245 VD-1	FP3-287	1	3 5/8"	4'-7 9/16"	37'-1 1/16"	4154	4154
245 VD-1	FP3-290	1	3 5/8"	9'-0"	27'-8 1/8"	6554	6554
245 VD-1	FP3-292	1	3 5/8"	9'-0"	27'-2"	6414	6414
245 VD-1	FP3-297	1	3 5/8"	9'-0"	37'-1 1/16"	8707	8707
245 VD-1	FP3-298	1	3 5/8"	9'-0"	27'-2"	6414	6414
245 VD-1	FP3-299	1	3 5/8"	9'-0"	27'-8 1/8"	6553	6553
245 VD-1	FP3-300	1	3 5/8"	6'-7 7/16"	27'-8 1/8"	2548	2548
245 VD-1	FP3-301	1	3 5/8"	7'-1 1/2"	27'-8 1/8"	3040	3040
245 VD-1	FP3-400	1	3 5/8"	2'-3 5/8"	5'-9 1/2"	96	96
245 VD-1	FP3-201	1	3 5/8"	9'-6 3/16"	38'-11 13/16"	8143	8143
245 VD-1	FP3-202	1	3 5/8"	7'-7 7/16"	27'-8 5/8"	4244	4244
245 VD-1	FP3-205	1	3 5/8"	2'-1 1/2"	38'-9 7/16"	3000	3000
245 VD-1	FP3-206	1	3 5/8"	9'-0"	38'-9 7/16"	8232	8232
245 VD-1	FP3-212	1	3 5/8"	9'-0"	38'-9 7/16"	5774	5774
245 VD-1	FP3-213	1	3 5/8"	6'-10 1/8"	26'-4"	3883	3883
245 VD-1	FP3-215	1	3 5/8"	9'-0"	20'-10 1/2"	4638	4638
245 VD-1	FP3-216	1	3 5/8"	8'-3 7/16"	26'-4"	5370	5370
245 VD-1	FP3-218	1	3 5/8"	6'-7 7/16"	26'-4"	3796	3796
245 VD-1	FP3-219	1	3 5/8"	6'-10 13/16"	26'-4"	4462	4462
245 VD-1	FP3-221	1	3 5/8"	9'-0"	38'-9 7/16"	6885	6885
245 VD-1	FP3-223	1	3 5/8"	9'-0"	38'-9 7/16"	9185	9185
245 VD-1	FP3-224	1	3 5/8"	9'-0"	38'-9 7/16"	9185	9185
245 VD-1	FP3-226	1	3 5/8"	4'-7 7/16"	38'-9 7/16"	4388	4388
245 VD-1	FP3-228	1	3 5/8"	9'-0"	20'-6 15/16"	4638	4638
245 VD-1	FP3-230	1	3 5/8"	9'-0"	11'-3 3/8"	2740	2740
245 VD-1	FP3-233	1	3 5/8"	9'-0"	20'-6 15/16"	5809	5809
245 VD-1	FP3-234	1	3 5/8"	9'-0"	20'-6 15/16"	6501	6501
245 VD-1	FP3-235	1	3 5/8"	9'-0"	37'-1 1/16"	7515	7515
245 VD-1	FP3-238	1	3 5/8"	9'-0"	38'-9 7/16"	8857	8857
245 VD-1	FP3-240	1	3 5/8"	9'-0"	27'-8 1/8"	6158	6158
245 VD-1	FP3-241	1	3 5/8"	9'-0"	40'-0"	8617	8617
245 VD-1	FP3-242	1	3 5/8"	9'-6 13/16"	26'-8 3/8"	2535	2535
245 VD-1	FP3-244	1	3 5/8"	9'-0"	27'-8 7/16"	4962	4962
245 VD-1	FP3-245	1	3 5/8"	6'-11 5/16"	26'-8 3/4"	3893	3893
245 VD-1	FP3-246	1	3 5/8"	9'-0"	20'-10 1/2"	4638	4638
245 VD-1	FP3-247	1	3 5/8"	8'-7 13/16"	26'-4"	5782	5782
245 VD-1	FP3-249	1	3 5/8"	9'-0"	38'-9 7/16"	8755	8755
245 VD-1	FP3-252	1	3 5/8"	9'-0"	38'-9 7/16"	8207	8207
245 VD-1	FP3-254	1	3 5/8"	3'-7 3/16"	38'-9 7/16"	2743	2743
245 VD-1	FP3-256	1	3 5/8"	9'-6 3/16"	38'-11 13/16"	8144	8144
245 VD-1	FP3-257	1	3 5/8"	8'-3 1/2"	26'-4"	5577	5577
245 VD-1	FP3-286	1	3 5/8"	4'-7 1/2"	20'-6 15/16"	2753	2753
245 VD-1	FP3-299	1	3 5/8"	1'-11 1/16"	12'-11 13/16"	633	633
245 VD-1	FP3-256	1	3 5/8"	0'-11 1/2"	26'-1 5/8"	579	579
245 VD-1	FP3-261	1	3 5/8"	1'-9 1/2"	18'-2 5/16"	828	828
245 VD-1	FP3-203	1	3 5/8"	6'-7 5/16"	26'-4"	3746	3746
245 VD-1	FP3-204	1	3 5/8"	9'-0"	20'-10 1/2"	4638	4638
245 VD-1	FP3-205	1	3 5/8"	9'-0"	20'-10 1/2"	4638	4638
245 VD-1	FP3-206	1	3 5/8"	7'-1 1/2"	27'-8 5/8"	3966	3966
							265221

REV	DATE	REMARKS
1	12/31/2020	SMTC IFF layout revisions
I	03/04/2020	Area B OFA
H	02/05/2020	Area B OFA
G	01/17/2020	Area A OFA glulam
F	12/11/2019	Area A OFA
E	11/18/2019	Area B Geo.
D	11/08/2019	Area B Geo.
C	10/29/2019	Area B Geo.

Ref Dwg: S102

ISSUED SMTC IFF layo

DATE: 12/31/2020

STRUCTURLAM
MASS TIMBER CORPORATION
Intelligence In Wood

DATE 18/Oct/2019	SHEET	REV.	PROJECT
BY CJU	SL25	1	BORREGAS
DWG TITLE LEVEL 3 CLT HATCH PLAN			Job# 25991

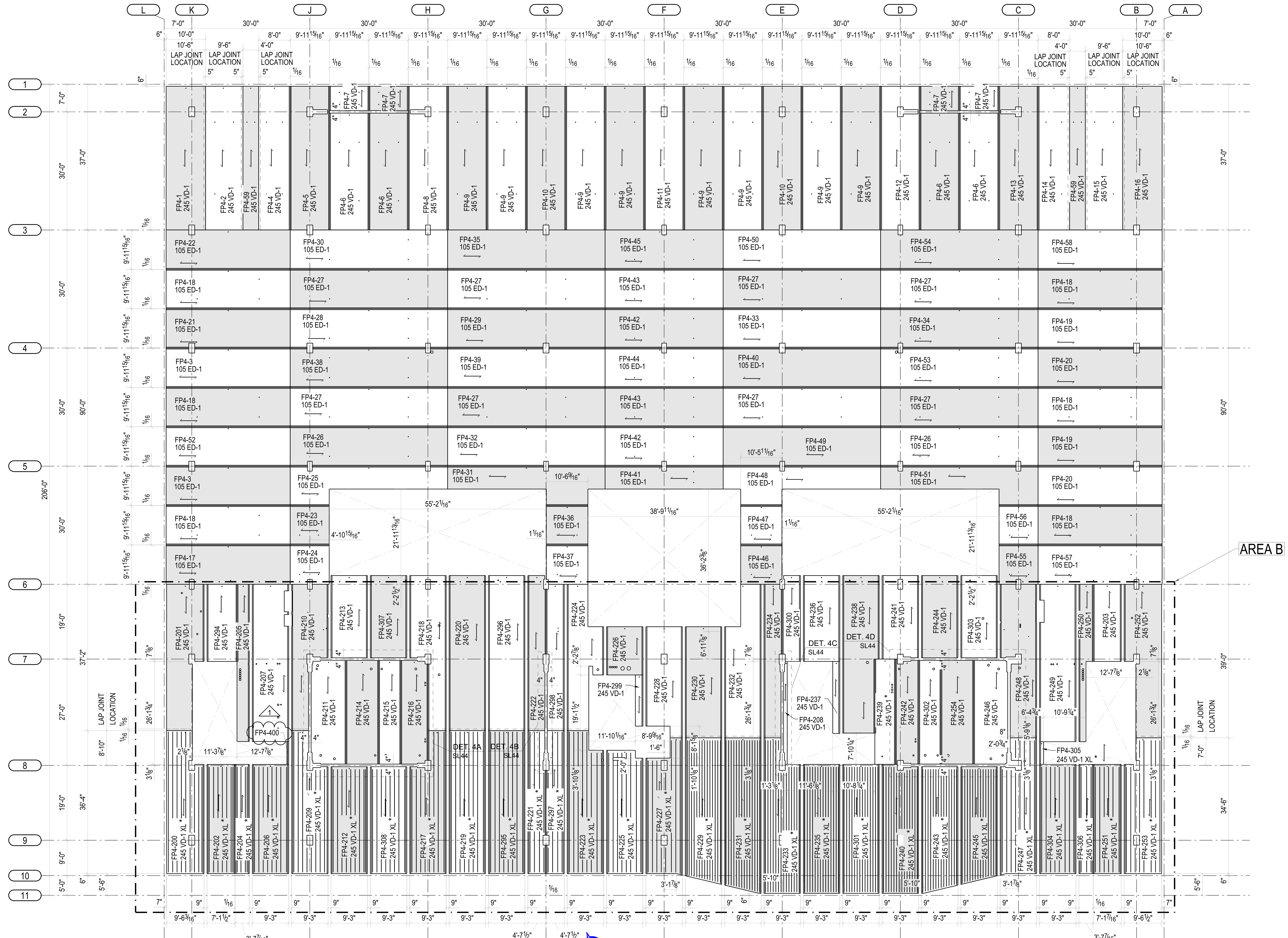

LEVEL 4 CLT HATCH PLAN

U/S OF CLT = EL. + 47'-9 7/8" (U.N.O.)

CLT SCHEDULE

TYPE	NAME	QTY	THICKNESS	WIDTH	LENGTH	WEIGHT(LB)	TOTAL WEIGHT
245 VD-1 XL	FP4-200	1	9 5/8"	9'-6 3/16"	36'-9 1/16"	8063	8063
245 VD-1 XL	FP4-202	1	9 5/8"	7'-1 1/2"	27'-9 1/8"	5039	5039
245 VD-1 XL	FP4-204	1	9 5/8"	3'-7 7/16"	27'-9 1/8"	2544	2544
245 VD-1 XL	FP4-206	1	9 5/8"	9'-3"	27'-9 1/8"	6556	6556
245 VD-1 XL	FP4-209	1	9 5/8"	9'-3"	36'-9 1/16"	7268	7268
245 VD-1 XL	FP4-212	1	9 5/8"	9'-3"	27'-2"	6414	6414
245 VD-1 XL	FP4-217	1	9 5/8"	9'-3"	36'-9 1/16"	7342	7342
245 VD-1 XL	FP4-219	1	9 5/8"	9'-3"	36'-9 1/16"	8630	8630
245 VD-1 XL	FP4-221	1	9 5/8"	4'-7 1/2"	36'-9 1/16"	4123	4123
245 VD-1 XL	FP4-223	1	9 5/8"	9'-3"	36'-9 1/16"	8127	8127
245 VD-1 XL	FP4-225	1	9 5/8"	9'-3"	31'-4 1/8"	7249	7249
245 VD-1 XL	FP4-227	1	9 5/8"	9'-3"	35'-3 1/4"	7167	7167
245 VD-1 XL	FP4-229	1	9 5/8"	9'-3"	37'-7 13/16"	8569	8569
245 VD-1 XL	FP4-231	1	9 5/8"	9'-3"	39'-11 1/16"	9130	9130
245 VD-1 XL	FP4-233	1	9 5/8"	9'-3"	39'-11 1/16"	8304	8304
245 VD-1 XL	FP4-235	1	9 5/8"	9'-3"	32'-9 1/8"	7725	7725
245 VD-1 XL	FP4-240	1	9 5/8"	9'-3"	32'-9 1/8"	7499	7499
245 VD-1 XL	FP4-243	1	9 5/8"	9'-3"	32'-2"	7351	7351
245 VD-1 XL	FP4-245	1	9 5/8"	9'-3"	29'-10 3/4"	6790	6790
245 VD-1 XL	FP4-247	1	9 5/8"	9'-3"	35'-3 1/4"	7434	7434
245 VD-1 XL	FP4-251	1	9 5/8"	7'-1 7/16"	27'-9 1/8"	5038	5038
245 VD-1 XL	FP4-253	1	9 5/8"	9'-6 3/16"	34'-11 1/16"	7755	7755
245 VD-1 XL	FP4-295	1	9 5/8"	9'-3"	36'-9 1/16"	8630	8630
245 VD-1 XL	FP4-297	1	9 5/8"	4'-7 1/2"	36'-9 1/16"	4123	4123
245 VD-1 XL	FP4-301	1	9 5/8"	9'-3"	32'-9 1/8"	7725	7725
245 VD-1 XL	FP4-304	1	9 5/8"	9'-3"	27'-9 1/8"	6556	6556
245 VD-1 XL	FP4-305	1	9 5/8"	1'-0 1/4"	5'-9"	147	147
245 VD-1 XL	FP4-306	1	9 5/8"	3'-7 7/16"	27'-9 1/8"	2544	2544
245 VD-1 XL	FP4-308	1	9 5/8"	9'-3"	27'-2"	6416	6416
245 VD-1	FP4-1	1	9 5/8"	10'-0"	36'-5 15/16"	9044	9044
245 VD-1	FP4-2	1	9 5/8"	9'-11"	36'-5 15/16"	8910	8910
245 VD-1	FP4-4	1	9 5/8"	8'-0"	36'-5 15/16"	7289	7289
245 VD-1	FP4-5	1	9 5/8"	9'-11 15/16"	36'-5 15/16"	9086	9086
245 VD-1	FP4-6	4	9 5/8"	9'-11 15/16"	29'-7 15/16"	7588	30353
245 VD-1	FP4-7	4	9 5/8"	9'-11 15/16"	6'-2"	1577	6310
245 VD-1	FP4-8	1	9 5/8"	9'-11 15/16"	36'-5 15/16"	9099	9099
245 VD-1	FP4-9	8	9 5/8"	9'-11 15/16"	36'-5 15/16"	9336	74692
245 VD-1	FP4-10	2	9 5/8"	9'-11 15/16"	36'-5 15/16"	9192	18384
245 VD-1	FP4-11	1	9 5/8"	9'-11 15/16"	36'-5 15/16"	9201	9201
245 VD-1	FP4-12	1	9 5/8"	9'-11 15/16"	36'-5 15/16"	9095	9095
245 VD-1	FP4-13	1	9 5/8"	9'-11 15/16"	36'-5 15/16"	9089	9089
245 VD-1	FP4-14	1	9 5/8"	8'-0"	36'-5 15/16"	7287	7287
245 VD-1	FP4-15	1	9 5/8"	9'-11"	36'-5 15/16"	8913	8913
245 VD-1	FP4-16	1	9 5/8"	10'-0"	36'-5 15/16"	9046	9046
245 VD-1	FP4-59	2	9 5/8"	4'-10"	36'-5 15/16"	4141	8282
245 VD-1	FP4-201	1	9 5/8"	9'-6 3/16"	37'-1 7/8"	7581	7581
245 VD-1	FP4-203	1	9 5/8"	7'-1 7/16"	19'-7 1/16"	3562	3562
245 VD-1	FP4-205	1	9 5/8"	3'-1 1/2"	39'-11 3/16"	3146	3146
245 VD-1	FP4-207	1	9 5/8"	9'-3"	39'-11 3/16"	9196	9196
245 VD-1	FP4-208	1	9 5/8"	0'-11 1/8"	26'-1 9/16"	581	581
245 VD-1	FP4-210	1	9 5/8"	9'-3"	37'-1 7/8"	6280	6280
245 VD-1	FP4-211	1	9 5/8"	8'-10 1/8"	26'-4"	5889	5889
245 VD-1	FP4-213	1	9 5/8"	9'-3"	20'-10 1/2"	4939	4939
245 VD-1	FP4-214	1	9 5/8"	8'-3 7/16"	26'-4"	5570	5570
245 VD-1	FP4-215	1	9 5/8"	5'-7 7/16"	26'-4"	3766	3766
245 VD-1	FP4-216	1	9 5/8"	6'-10 13/16"	26'-4"	4569	4569
245 VD-1	FP4-218	1	9 5/8"	9'-3"	39'-4 7/16"	6924	6924
245 VD-1	FP4-220	1	9 5/8"	9'-3"	39'-4 7/16"	9266	9266
245 VD-1	FP4-222	1	9 5/8"	4'-7 1/2"	39'-4 7/16"	4370	4370
245 VD-1	FP4-224	1	9 5/8"	9'-3"	37'-1 7/8"	6244	6244
245 VD-1	FP4-226	1	9 5/8"	9'-3"	12'-3 1/8"	2854	2854
245 VD-1	FP4-228	1	9 5/8"	9'-3"	28'-2 11/16"	6097	6097
245 VD-1	FP4-230	1	9 5/8"	9'-3"	28'-2 11/16"	6628	6628
245 VD-1	FP4-232	1	9 5/8"	9'-3"	38'-11 7/8"	8057	8057
245 VD-1	FP4-234	1	9 5/8"	4'-7 1/2"	38'-11 7/8"	4337	4337
245 VD-1	FP4-236	1	9 5/8"	9'-3"	21'-9 5/8"	5159	5159
245 VD-1	FP4-237	1	9 5/8"	1'-9 9/16"	18'-3 7/16"	831	831
245 VD-1	FP4-238	1	9 5/8"	9'-3"	39'-11 15/16	8920	8920
245 VD-1	FP4-239	1	9 5/8"	5'-2 11/16"	26'-8 3/4"	3554	3554
245 VD-1	FP4-241	1	9 5/8"	9'-3"	21'-2 7/16"	4846	4846
245 VD-1	FP4-242	1	9 5/8"	5'-11 5/16"	26'-8 11/16"	3895	3895
245 VD-1	FP4-244	1	9 5/8"	9'-3"	20'-10 1/2"	4940	4940
245 VD-1	FP4-246	1	9 5/8"	8'-7 13/16"	26'-4"	5788	5788
245 VD-1	FP4-248	1	9 5/8"	9'-3"	38'-11 7/8"	7620	7620
245 VD-1	FP4-249	1	9 5/8"	9'-3"	39'-11 11/16	9289	9289
245 VD-1	FP4-250	1	9 5/8"	3'-7 7/16"	39'-11 11/16	2695	2695
245 VD-1	FP4-252	1	9 5/8"	9'-6 3/16"	38'-11 7/8"	7894	7894
245 VD-1	FP4-254	1	9 5/8"	8'-3 1/2"	26'-4"	5577	5577
245 VD-1	FP4-294	1	9 5/8"	7'-7 7/16"	19'-7 1/16"	3814	3814
245 VD-1	FP4-296	1	9 5/8"	9'-3"	39'-4 7/16"	9265	9265
245 VD-1	FP4-298	1	9 5/8"	4'-7 1/2"	37'-1 7/8"	4135	4135
245 VD-1	FP4-299	1	9 5/8"	1'-11 1/16"	12'-11 13/16	633	633
245 VD-1	FP4-300	1	9 5/8"	4'-7 1/2"	21'-9 5/8"	2484	2484
245 VD-1	FP4-302	1	9 5/8"	5'-7 5/16"	26'-4"	3752	3752
245 VD-1	FP4-303	1	9 5/8"	9'-3"	20'-10 1/2"	4933	4933
245 VD-1	FP4-307	1	9 5/8"	9'-3"	20'-10 1/2"	4939	4939
105 ED-1	FP4-3	2	4 1/8"	9'-11 15/16"	31'-5 15/16"	3411	6823
105 ED-1	FP4-17	1	4 1/8"	9'-11 15/16"	31'-5 15/16"	3433	3433
105 ED-1	FP4-18	6	4 1/8"	9'-11 15/16"	31'-5 15/16"	3431	20586
105 ED-1	FP4-19	2	4 1/8"	9'-11 15/16"	31'-5 15/16"	3411	6823
105 ED-1	FP4-20	2	4 1/8"	9'-11 15/16"	31'-5 15/16"	3411	6823
105 ED-1	FP4-21	1	4 1/8"	9'-11 15/16"	31'-5 15/16"	3411	3411
105 ED-1	FP4-22	1	4 1/8"	9'-11 15/16"	31'-5 15/16"	3430	3430
105 ED-1	FP4-23	1	4 1/8"	9'-11 15/16"	9'-10 15/16"	1079	1079
105 ED-1	FP4-24	1	4 1/8"	9'-11 15/16"	9'-10 15/16"	1069	1069
105 ED-1	FP4-25	1	4 1/8"	9'-11 15/16"	39'-11 15/16	2955	2955
105 ED-1	FP4-26	2	4 1/8"	9'-11 15/16"	39'-11 15/16	4325	8650
105 ED-1	FP4-27	8	4 1/8"	9'-11 15/16"	39'-11 15/16	4357	34852
105 ED-1	FP4-28	1	4 1/8"	9'-11 15/16"	39'-11 15/16	4321	4321
105 ED-1	FP4-29	1	4 1/8"	9'-11 15/16"	39'-11 15/16	4337	4337
105 ED-1	FP4-30	1	4 1/8"	9'-11 15/16"	39'-11 15/16	4344	4344
105 ED-1	FP4-31	1	4 1/8"	9'-11 15/16"	39'-11 15/16	2999	2999
105 ED-1	FP4-32	1	4 1/8"	9'-11 15/16"	39'-11 15/16	4341	4341
105 ED-1	FP4-33	1	4 1/8"	9'-11 15/16"	39'-11 15/16	4337	4337
105 ED-1	FP4-34	1	4 1/8"	9'-11 15/16"	39'-11 15/16	4321	4321
105 ED-1	FP4-35	1	4 1/8"	9'-11 15/16"	39'-11 15/16	4361	4361
105 ED-1	FP4-36	1	4 1/8"	9'-11 15/16"	10'-6 9/16"	1149	1149
105 ED-1	FP4-37	1	4 1/8"	9'-11 15/16"	10'-6 9/16"	1148	1148
105 ED-1	FP4-38	1	4 1/8"	9'-11 15/16"	39'-11 15/16	4318	4318
105 ED-1	FP4-39	1	4 1/8"	9'-11 15/16"	39'-11 15/16	4337	4337
105 ED-1	FP4-40	1	4 1/8"	9'-11 15/16"	39'-11 15/16	4337	4337
105 ED-1	FP4-41	1	4 1/8"	5'-9 3/4"	29'-11 15/16	1887	1887
105 ED-1	FP4-42	2	4 1/8"	9'-11 15/16"	29'-11 15/16	3251	6503
105 ED-1	FP4-43	2	4 1/8"	9'-11 15/16"	29'-11 15/16	3267	6534
105 ED-1	FP4-44	1	4 1/8"	9'-11 15/16"	29'-11 15/16	3251	3251
105 ED-1	FP4-45	1	4 1/8"	9'-11 15/16"	29'-11 15/16	3269	3269
105 ED-1	FP4-46	1	4 1/8"	9'-11 15/16"	10'-5 11/16"	1140	1140
105 ED-1	FP4-47	1	4 1/8"	9'-11 15/16"	10'-5 11/16"	1141	1141
105 ED-1	FP4-48	1	4 1/8"	9'-11 15/16"	39'-11 15/16	2996	2996
105 ED-1	FP4-49	1	4 1/8"	9'-11 15/16"	39'-11 15/16	4341	4341
105 ED-1	FP4-50	1	4 1/8"	9'-11 15/16"	39'-11 15/16	4361	4361
105 ED-1	FP4-51	1	4 1/8"	9'-11 15/16"	39'-11 15/16	2955	2955
105 ED-1	FP4-52	1	4 1/8"	9'-11 15/16"	31'-5 15/16"	3411	3411
105 ED-1	FP4-53	1	4 1/8"	9'-11 15/16"	39'-11 15/16	4318	4318
105 ED-1	FP4-54	1	4 1/8"	9'-11 15/16"	39'-11 15/16	4344	4344
105 ED-1	FP4-55	1	4 1/8"	9'-11 15/16"	9'-10 15/16"	1069	1069
105 ED-1	FP4-56	1	4 1/8"	9'-11 15/16"	9'-10 15/16"	1079	1079
105 ED-1	FP4-57	1	4 1/8"	9'-11 15/16"	31'-5 15/16"	3434	3434
105 ED-1	FP4-58	1	4 1/8"	9'-11 15/16"	31'-5 15/16"	3430	3430
							847204

NOTES:

1. * - DENOTES COMPOSITE CLT PANEL

REV	DATE	REMARKS
1	12/31/2020	SMTC IFF layout revisions
I	03/04/2020	Area B OFA
H	02/05/2020	Area B OFA
G	01/17/2020	Area A OFA glulam
F	12/11/2019	Area A OFA
E	11/18/2019	Area B Geo.
D	11/08/2019	Area B Geo.
C	10/29/2019	Area B Geo.

Ref Dwg: S103

ISSUED SMTC IFF layo

DATE: 12/31/2020

STRUCTURLAM
MASS TIMBER CORPORATION
Intelligence In Wood

DATE 18/Oct/2019

BY CJU

DWG TITLE LEVEL 4 CLT HATCH PLAN

SHEET SL26

REV. 1

PROJECT

BORREGAS

Job# 25991

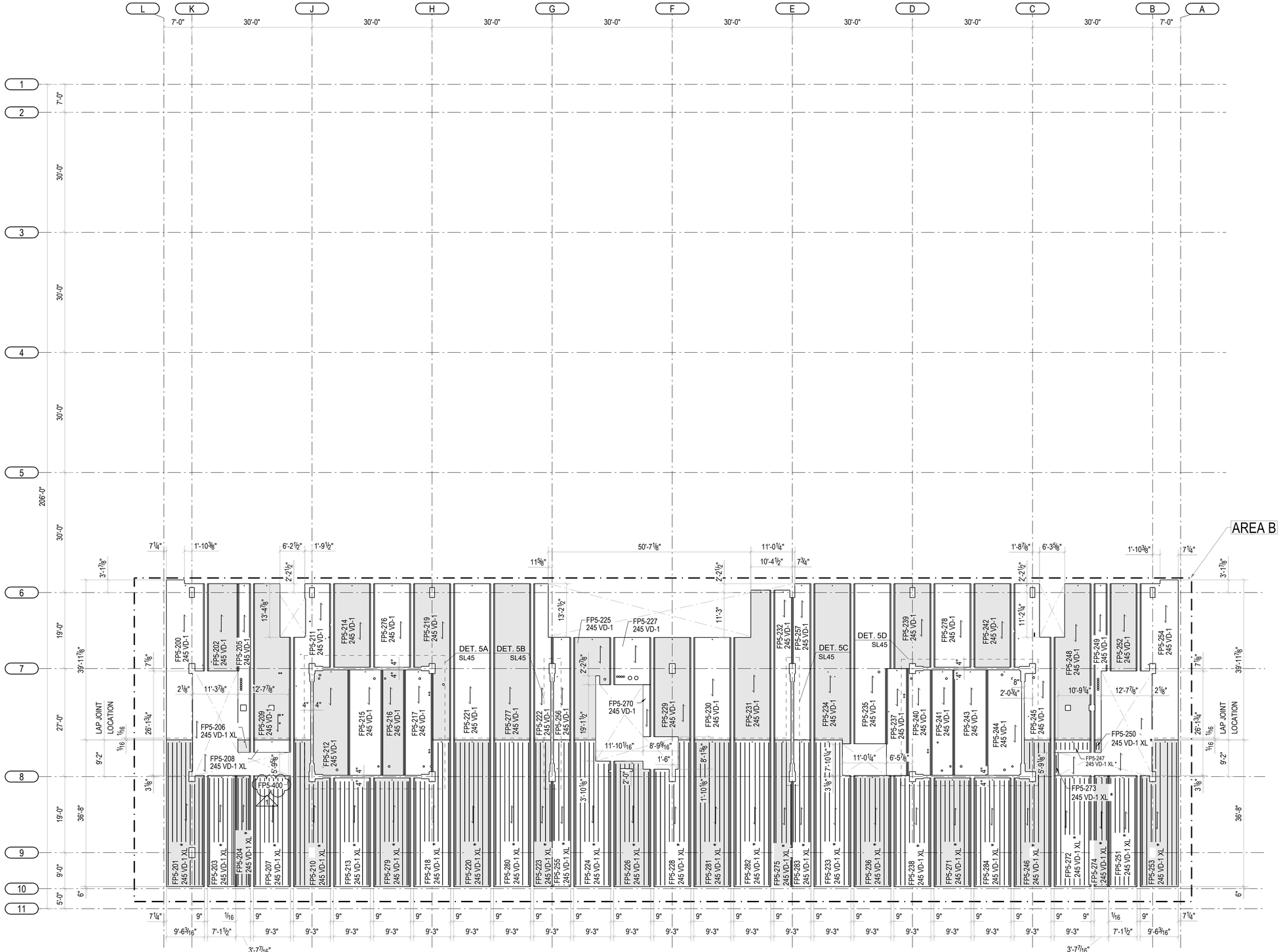

LEVEL 5 CLT HATCH PLAN

U/S OF CLT = EL. + 63'-3 7/8" (U.N.O.)

CLT SCHEDULE

PANEL	LAYOUT	QTY	THICKNESS	WIDTH	LENGTH	AREA (SF)	VOLUME (CF)
245 VD-1 XL	FP5-201	1	3 5/8"	8'-6 5/16"	37'-1 1/16"	8119	8119
245 VD-1 XL	FP5-203	1	3 5/8"	7'-11 1/2"	37'-3"	3029	3029
245 VD-1 XL	FP5-204	1	3 5/8"	0'-7 7/16"	37'-9 1/8"	2544	2544
245 VD-1 XL	FP5-206	1	3 5/8"	3'-1 1/2"	2'-6 5/16"	264	265
245 VD-1 XL	FP5-207	1	3 5/8"	8'-2"	27'-9 1/8"	6554	6554
245 VD-1 XL	FP5-208	1	3 5/8"	8'-0"	2'-6 5/16"	164	164
245 VD-1 XL	FP5-210	1	3 5/8"	8'-0"	37'-1 1/16"	7303	7303
245 VD-1 XL	FP5-213	1	3 5/8"	8'-2"	27'-2"	6412	6412
245 VD-1 XL	FP5-216	1	3 5/8"	8'-0"	37'-1 1/16"	7380	7380
245 VD-1 XL	FP5-220	1	3 5/8"	8'-0"	37'-1 1/16"	8707	8707
245 VD-1 XL	FP5-223	1	3 5/8"	4'-7 1/2"	37'-1 1/16"	4158	4158
245 VD-1 XL	FP5-224	1	3 5/8"	8'-0"	37'-1 1/16"	8169	8169
245 VD-1 XL	FP5-226	1	3 5/8"	8'-0"	37'-4 1/8"	7246	7246
245 VD-1 XL	FP5-228	1	3 5/8"	8'-0"	37'-5 15/16"	7311	7311
245 VD-1 XL	FP5-233	1	3 5/8"	8'-0"	37'-1 1/16"	8210	8210
245 VD-1 XL	FP5-236	1	3 5/8"	8'-0"	27'-9 1/8"	6553	6553
245 VD-1 XL	FP5-238	1	3 5/8"	8'-0"	27'-9 1/8"	6327	6327
245 VD-1 XL	FP5-246	1	3 5/8"	8'-0"	37'-1 1/16"	7602	7602
245 VD-1 XL	FP5-247	1	3 5/8"	8'-0"	3'-6 15/16"	793	793
245 VD-1 XL	FP5-250	1	3 5/8"	7'-9 1/2"	2'-6 11/16"	162	162
245 VD-1 XL	FP5-251	1	3 5/8"	7'-1 1/2"	27'-9 1/8"	5043	5043
245 VD-1 XL	FP5-253	1	3 5/8"	8'-6 3/16"	37'-1 1/16"	8121	8121
245 VD-1 XL	FP5-255	1	3 5/8"	4'-7 1/2"	37'-1 1/16"	4159	4159
245 VD-1 XL	FP5-271	1	3 5/8"	8'-0"	27'-2"	6414	6414
245 VD-1 XL	FP5-272	1	3 5/8"	8'-0"	27'-9 1/8"	6554	6554
245 VD-1 XL	FP5-273	1	3 5/8"	3'-3 1/2"	3'-9"	12.2	12
245 VD-1 XL	FP5-274	1	3 5/8"	0'-7 7/16"	27'-9 1/8"	2546	2546
245 VD-1 XL	FP5-275	1	3 5/8"	4'-7 1/2"	37'-1 1/16"	4158	4158
245 VD-1 XL	FP5-279	1	3 5/8"	8'-2"	27'-2"	6412	6412
245 VD-1 XL	FP5-280	1	3 5/8"	8'-0"	37'-1 1/16"	8706	8706
245 VD-1 XL	FP5-281	1	3 5/8"	8'-0"	37'-1 1/16"	8706	8706
245 VD-1 XL	FP5-282	1	3 5/8"	8'-0"	37'-1 1/16"	8705	8705
245 VD-1 XL	FP5-283	1	3 5/8"	4'-7 1/2"	37'-1 1/16"	4158	4159
245 VD-1 XL	FP5-284	1	3 5/8"	8'-0"	27'-2"	5414	5414
245 VD-	FP5-200	1	3 5/8"	8'-6 3/16"	38'-11 13/16"	8142	8142
245 VD-	FP5-202	1	3 5/8"	7'-7 11/16"	27'-9 5/8"	4243	4243
245 VD-	FP5-205	1	3 5/8"	3'-1 1/2"	38'-9 11/16"	3002	3002
245 VD-	FP5-209	1	3 5/8"	8'-0"	38'-9 11/16"	8233	8233
245 VD-	FP5-211	1	3 5/8"	8'-0"	38'-9 11/16"	3729	3729
245 VD-	FP5-212	1	3 5/8"	4'-10 1/8"	26'-4"	5060	5060
245 VD-	FP5-214	1	3 5/8"	8'-0"	20'-10 1/2"	4938	4938
245 VD-	FP5-215	1	3 5/8"	8'-3 7/16"	26'-4"	5071	5071
245 VD-	FP5-218	1	3 5/8"	0'-7 7/16"	26'-4"	3796	3796
245 VD-	FP5-217	1	3 5/8"	0'-10 13/16"	26'-4"	4566	4566
245 VD-	FP5-219	1	3 5/8"	8'-0"	38'-9 11/16"	8882	8882
245 VD-	FP5-221	1	3 5/8"	8'-0"	38'-9 11/16"	9185	9185
245 VD-	FP5-222	1	3 5/8"	4'-7 1/2"	38'-9 11/16"	4652	4652
245 VD-	FP5-223	1	3 5/8"	8'-0"	20'-8 15/16"	4633	4633
245 VD-	FP5-227	1	3 5/8"	8'-0"	17'-9 5/8"	2739	2739
245 VD-	FP5-229	1	3 5/8"	8'-0"	20'-8 15/16"	5813	5813
245 VD-	FP5-230	1	3 5/8"	8'-0"	20'-8 15/16"	6000	6000
245 VD-	FP5-231	1	3 5/8"	8'-0"	37'-5 1/16"	7516	7516
245 VD-	FP5-232	1	3 5/8"	4'-7 1/2"	37'-5 1/16"	4162	4162
245 VD-	FP5-234	1	3 5/8"	8'-0"	40'-0"	8248	8248
245 VD-	FP5-235	1	3 5/8"	8'-0"	40'-0"	8919	8919
245 VD-	FP5-237	1	3 5/8"	0'-2 13/16"	38'-8 3/4"	3566	3566
245 VD-	FP5-239	1	3 5/8"	8'-0"	27'-2 7/16"	4844	4844
245 VD-	FP5-240	1	3 5/8"	0'-11 3/16"	38'-8 11/16"	3898	3898
245 VD-	FP5-241	1	3 5/8"	0'-7 5/16"	26'-4"	3762	3762
245 VD-	FP5-242	1	3 5/8"	8'-0"	20'-10 1/2"	4933	4933
245 VD-	FP5-243	1	3 5/8"	8'-3 7/16"	26'-4"	5077	5077
245 VD-	FP5-244	1	3 5/8"	6'-7 13/16"	26'-4"	3789	3789
245 VD-	FP5-245	1	3 5/8"	8'-0"	38'-9 11/16"	8764	8764
245 VD-	FP5-248	1	3 5/8"	8'-0"	38'-9 11/16"	8208	8208
245 VD-	FP5-249	1	3 5/8"	0'-3"	38'-9 11/16"	2533	2533
245 VD-	FP5-252	1	3 5/8"	8'-0"	27'-9 5/8"	3703	3707
245 VD-	FP5-254	1	3 5/8"	8'-6 3/16"	38'-11 13/16"	8142	8142
245 VD-	FP5-256	1	3 5/8"	4'-7 1/2"	20'-8 15/16"	2796	2796
245 VD-	FP5-257	1	3 5/8"	4'-7 1/2"	38'-9 11/16"	4327	4327
245 VD-	FP5-270	1	3 5/8"	0'-11 1/16"	12'-11 13/16"	833	833
245 VD-	FP5-276	1	3 5/8"	8'-0"	20'-10 1/2"	4938	4938
245 VD-	FP5-277	1	3 5/8"	8'-0"	38'-9 11/16"	9184	9184
245 VD-	FP5-278	1	3 5/8"	8'-0"	20'-10 1/2"	4938	4938
							401879

NOTES:

1. * - DENOTES COMPOSITE CLT PANEL

REV	DATE	REMARKS
1	12/31/2020	SMTC IFF layout revisions
I	03/04/2020	Area B OFA
H	02/05/2020	Area B OFA
G	01/17/2020	Area A OFA glulam
F	12/11/2019	Area A OFA
E	11/18/2019	Area B Geo.
D	11/08/2019	Area B Geo.
C	10/29/2019	Area B Geo.

Ref Dwg: S104

ISSUED SMTC IFF layo

DATE: 12/31/2020

STRUCTURLAM
MASS TIMBER CORPORATION
Intelligence In Wood

DATE 17/Oct/2019

BY CMI

SHEET SL27

REV. 1

DWG TITLE LEVEL 5 CLT HATCH PLAN

PROJECT

BORREGAS

Job# 25991

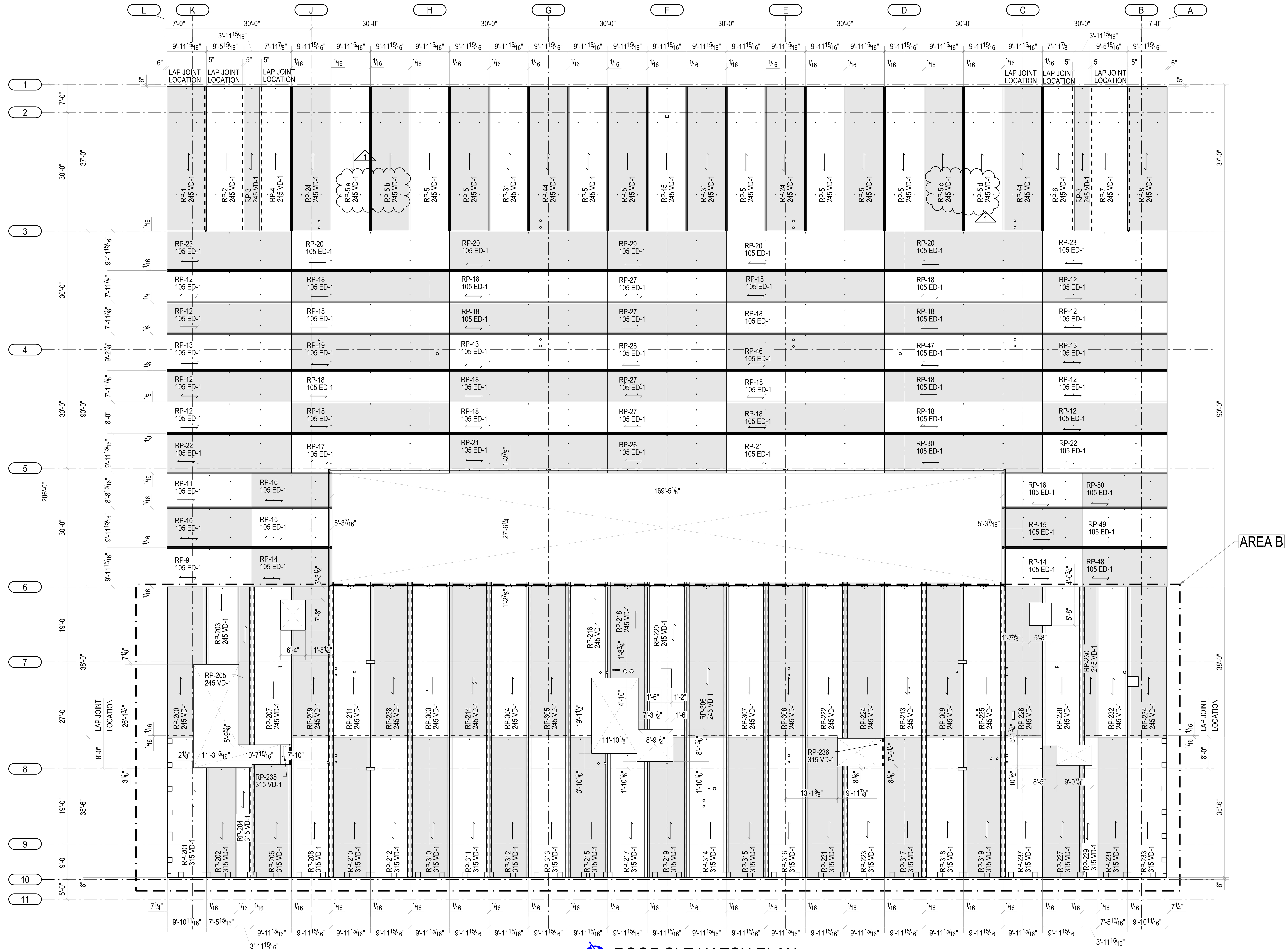

ROOF CLT HATCH PLAN

U/S OF CLT = EL. + 78'-9 7/8" (U.N.O.)

***WORK THIS SHEET WITH SL37

CLT SCHEDULE

TYPE	NAME	QTY	THICKNESS	WIDTH	LENGTH	WEIGHT(LB)	TOTAL WEIGHT
315 VD-1	RP-201	1	12 3/8"	9'-10 11/16"	35'-11 1/16"	10504	10504
315 VD-1	RP-202	1	12 3/8"	7'-5 15/16"	27'-9 1/8"	6651	6651
315 VD-1	RP-204	1	12 3/8"	3'-11 15/16"	27'-9 1/8"	3449	3449
315 VD-1	RP-206	1	12 3/8"	9'-11 15/16"	28'-7"	9032	9032
315 VD-1	RP-208	1	12 3/8"	9'-11 15/16"	35'-11 1/16"	11252	11252
315 VD-1	RP-210	1	12 3/8"	9'-11 15/16"	35'-11 1/16"	11243	11243
315 VD-1	RP-212	1	12 3/8"	9'-11 15/16"	35'-11 1/16"	11254	11254
315 VD-1	RP-215	1	12 3/8"	9'-11 15/16"	35'-11 1/16"	10689	10689
315 VD-1	RP-217	1	12 3/8"	9'-11 15/16"	31'-4 1/8"	9750	9750
315 VD-1	RP-219	1	12 3/8"	9'-11 15/16"	35'-11 1/16"	9956	9956
315 VD-1	RP-221	1	12 3/8"	9'-11 15/16"	35'-11 1/16"	10853	10853
315 VD-1	RP-223	1	12 3/8"	9'-11 15/16"	28'-2 3/8"	8910	8910
315 VD-1	RP-227	1	12 3/8"	9'-11 15/16"	33'-6 3/16"	9511	9511
315 VD-1	RP-229	1	12 3/8"	3'-11 15/16"	35'-11 1/16"	4045	4045
315 VD-1	RP-231	1	12 3/8"	7'-5 15/16"	35'-11 1/16"	8549	8549
315 VD-1	RP-233	1	12 3/8"	9'-10 11/16"	35'-11 1/16"	11324	11324
315 VD-1	RP-235	1	12 3/8"	2'-9 15/16"	4'-11 5/8"	430	430
315 VD-1	RP-236	1	12 3/8"	1'-10 11/16"	7'-0 1/8"	390	390
315 VD-1	RP-237	1	12 3/8"	9'-11 15/16"	35'-11 1/16"	11245	11245
315 VD-1	RP-310	1	12 3/8"	9'-11 15/16"	35'-11 1/16"	11270	11270
315 VD-1	RP-311	1	12 3/8"	9'-11 15/16"	35'-11 1/16"	11273	11273
315 VD-1	RP-312	1	12 3/8"	9'-11 15/16"	35'-11 1/16"	11273	11273
315 VD-1	RP-313	1	12 3/8"	9'-11 15/16"	35'-11 1/16"	11270	11270
315 VD-1	RP-314	1	12 3/8"	9'-11 15/16"	35'-11 1/16"	11247	11247
315 VD-1	RP-315	1	12 3/8"	9'-11 15/16"	35'-11 1/16"	11273	11273
315 VD-1	RP-316	1	12 3/8"	9'-11 15/16"	35'-11 1/16"	11258	11258
315 VD-1	RP-317	1	12 3/8"	9'-11 15/16"	35'-11 1/16"	11270	11270
315 VD-1	RP-318	1	12 3/8"	9'-11 15/16"	35'-11 1/16"	11248	11248
315 VD-1	RP-319	1	12 3/8"	9'-11 15/16"	35'-11 1/16"	11248	11248
245 VD-1	RP-1	1	9 5/8"	10'-0"	36'-5 15/16"	9189	9189
245 VD-1	RP-2	1	9 5/8"	9'-11"	36'-5 15/16"	8910	8910
245 VD-1	RP-3	2	9 5/8"	4'-10"	36'-5 15/16"	4140	8281
245 VD-1	RP-4	1	9 5/8"	8'-0"	36'-5 15/16"	7289	7289
245 VD-1	RP-5	12	9 5/8"	9'-11 15/16"	36'-5 15/16"	9336	112037
245 VD-1	RP-6	1	9 5/8"	8'-0"	36'-5 15/16"	7290	7290
245 VD-1	RP-7	1	9 5/8"	9'-11"	36'-5 15/16"	8913	8913
245 VD-1	RP-8	1	9 5/8"	10'-0"	36'-5 15/16"	9190	9190
245 VD-1	RP-24	2	9 5/8"	9'-11 15/16"	36'-5 15/16"	9327	18654
245 VD-1	RP-31	2	9 5/8"	9'-11 15/16"	36'-5 15/16"	9336	18673
245 VD-1	RP-44	2	9 5/8"	9'-11 15/16"	36'-5 15/16"	9327	18654
245 VD-1	RP-45	1	9 5/8"	9'-11 15/16"	36'-5 15/16"	9325	9325
245 VD-1	RP-200	1	9 5/8"	9'-10 11/16"	37'-11 7/8"	7925	7925
245 VD-1	RP-203	1	9 5/8"	7'-11 15/16"	19'-7 1/16"	3882	3882
245 VD-1	RP-205	1	9 5/8"	3'-5 15/16"	39'-11 3/16"	3303	3303
245 VD-1	RP-207	1	9 5/8"	9'-11 15/16"	39'-11 3/16"	9222	9222
245 VD-1	RP-209	1	9 5/8"	9'-11 15/16"	37'-11 7/8"	8509	8509
245 VD-1	RP-211	1	9 5/8"	9'-11 15/16"	39'-2 13/16"	9467	9467
245 VD-1	RP-213	1	9 5/8"	9'-11 15/16"	39'-2 13/16"	9495	9495
245 VD-1	RP-214	1	9 5/8"	9'-11 15/16"	39'-2 13/16"	9493	9493
245 VD-1	RP-216	1	9 5/8"	9'-11 15/16"	39'-2 13/16"	8024	8024
245 VD-1	RP-218	1	9 5/8"	9'-11 15/16"	37'-3 1/8"	6535	6535
245 VD-1	RP-220	1	9 5/8"	9'-11 15/16"	39'-2 13/16"	8883	8883
245 VD-1	RP-222	1	9 5/8"	9'-11 15/16"	39'-6 1/4"	9518	9518
245 VD-1	RP-224	1	9 5/8"	9'-11 15/16"	39'-6 1/4"	9618	9618
245 VD-1	RP-225	1	9 5/8"	9'-11 15/16"	39'-2 13/16"	9482	9482
245 VD-1	RP-226	1	9 5/8"	9'-11 15/16"	37'-11 7/8"	8698	8698
245 VD-1	RP-228	1	9 5/8"	9'-11 15/16"	39'-11 11/16	9429	9429
245 VD-1	RP-230	1	9 5/8"	3'-11 15/16"	37'-11 7/8"	3599	3599
245 VD-1	RP-232	1	9 5/8"	7'-5 15/16"	37'-11 7/8"	6992	6992
245 VD-1	RP-234	1	9 5/8"	9'-10 11/16"	37'-11 7/8"	9192	9192
245 VD-1	RP-238	1	9 5/8"	9'-11 15/16"	39'-2 13/16"	9484	9484
245 VD-1	RP-303	1	9 5/8"	9'-11 15/16"	39'-2 13/16"	9497	9497
245 VD-1	RP-304	1	9 5/8"	9'-11 15/16"	39'-2 13/16"	9498	9498
245 VD-1	RP-305	1	9 5/8"	9'-11 15/16"	39'-2 13/16"	9461	9461
245 VD-1	RP-306	1	9 5/8"	9'-11 15/16"	39'-2 13/16"	9498	9498
245 VD-1	RP-307	1	9 5/8"	9'-11 15/16"	39'-2 13/16"	9498	9498
245 VD-1	RP-308	1	9 5/8"	9'-11 15/16"	39'-2 13/16"	9451	9451
245 VD-1	RP-309	1	9 5/8"	9'-11 15/16"	39'-2 13/16"	9474	9474
105 ED-1	RP-9	1	4 1/8"	9'-11 15/16"	21'-5 15/16"	2355	2355
105 ED-1	RP-10	1	4 1/8"	9'-11 15/16"	21'-5 15/16"	2342	2342
105 ED-1	RP-11	1	4 1/8"	8'-8 15/16"	21'-5 15/16"	2045	2045
105 ED-1	RP-12	8	4 1/8"	7'-11 7/8"	31'-5 15/16"	2736	21889
105 ED-1	RP-13	2	4 1/8"	9'-2 7/8"	31'-5 15/16"	3170	6340
105 ED-1	RP-14	2	4 1/8"	9'-11 15/16"	20'-3 7/16"	2222	4444
105 ED-1	RP-15	2	4 1/8"	9'-11 15/16"	20'-3 7/16"	2210	4419
105 ED-1	RP-16	2	4 1/8"	8'-8 15/16"	20'-3 7/16"	1930	3860
105 ED-1	RP-17	1	4 1/8"	9'-11 15/16"	39'-11 15/16	4375	4375
105 ED-1	RP-18	16	4 1/8"	7'-11 7/8"	39'-11 15/16	3474	55590
105 ED-1	RP-19	1	4 1/8"	9'-2 7/8"	39'-11 15/16	4018	4018
105 ED-1	RP-20	4	4 1/8"	9'-11 15/16"	39'-11 15/16	4381	17525
105 ED-1	RP-21	2	4 1/8"	9'-11 13/16"	39'-11 15/16	4378	8757
105 ED-1	RP-22	2	4 1/8"	9'-11 15/16"	31'-5 15/16"	3431	6862
105 ED-1	RP-23	2	4 1/8"	9'-11 15/16"	31'-5 15/16"	3450	6901
105 ED-1	RP-25	1	4 1/8"	5'-3 3/8"	4'-3"	175	175
105 ED-1	RP-26	1	4 1/8"	9'-11 13/16"	29'-11 15/16	3284	3284
105 ED-1	RP-27	4	4 1/8"	7'-11 7/8"	29'-11 15/16	2606	10422
105 ED-1	RP-28	1	4 1/8"	9'-2 7/8"	29'-11 15/16	3019	3019
105 ED-1	RP-29	1	4 1/8"	9'-11 15/16"	29'-11 15/16	3286	3286
105 ED-1	RP-30	1	4 1/8"	9'-11 13/16"	39'-11 15/16	4372	4372
105 ED-1	RP-32	1	4 1/8"	10'-0"	4'-10 5/16"	498	498
105 ED-1	RP-33	1	4 1/8"	5'-3 3/8"	4'-3"	175	175
105 ED-1	RP-34	1	4 1/8"	10'-0"	4'-2 1/16"	422	422
105 ED-1	RP-35	1	4 1/8"	9'-9 13/16"	3'-5 13/16"	341	341
105 ED-1	RP-36	2	4 1/8"	5'-3 3/8"	2'-8"	155	311
105 ED-1	RP-37	12	4 1/8"	9'-11 15/16"	4'-3"	323	3870
105 ED-1	RP-38	12	4 1/8"	9'-11 15/16"	2'-8"	294	3525
105 ED-1	RP-39	2	4 1/8"	9'-11 15/16"	4'-3"	322	644
105 ED-1	RP-40	2	4 1/8"	9'-11 15/16"	2'-8"	291	582
105 ED-1	RP-41	2	4 1/8"	9'-11 15/16"	4'-3"	322	644
105 ED-1	RP-42	2	4 1/8"	9'-11 15/16"	2'-8"	291	582
105 ED-1	RP-43	1	4 1/8"	9'-2 7/8"	39'-11 15/16	4021	4021
105 ED-1	RP-46	1	4 1/8"	9'-2 7/8"	39'-11 15/16	4021	4021
105 ED-1	RP-47	1	4 1/8"	9'-2 7/8"	39'-11 15/16	4018	4018
105 ED-1	RP-48	1	4 1/8"	9'-11 15/16"	21'-5 15/16"	2355	2355
105 ED-1	RP-49	1	4 1/8"	9'-11 15/16"	21'-5 15/16"	2342	2342
105 ED-1	RP-50	1	4 1/8"	8'-8 15/16"	21'-5 15/16"	2045	2045
105 ED-1	RP-300	1	4 1/8"	10'-0"	4'-10 5/16"	498	498
105 ED-1	RP-301	1	4 1/8"	10'-0"	4'-2 1/16"	422	422
105 ED-1	RP-302	1	4 1/8"	9'-9 13/16"	3'-5 13/16"	341	341
							943134

REV	DATE	REMARKS
1	12/31/2020	SMTC IFF layout revisions
I	03/04/2020	Area B OFA
H	02/05/2020	Area B OFA
G	01/17/2020	Area A OFA glulam
F	12/11/2019	Area A OFA
E	11/18/2019	Area B Geo.
D	11/08/2019	Area B Geo.
C	10/29/2019	Area B Geo.

Ref Dwg: S105

ISSUED SMTC IFF layo

DATE: 12/31/2020

STRUCTURLAM
MASS TIMBER CORPORATION
Intelligence In Wood

DATE 17/Oct/2019

BY CMI

DWG TITLE ROOF CLT HATCH PLAN

SHEET SL28

REV. 1

PROJECT BORREGAS

Job# 25991

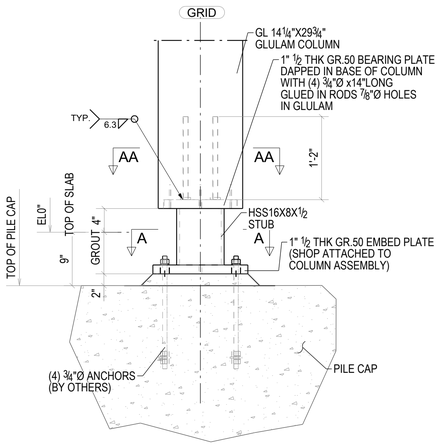

DETAIL 1

REF. :1/S400
COLUMN BASE PLATE CONNECTION

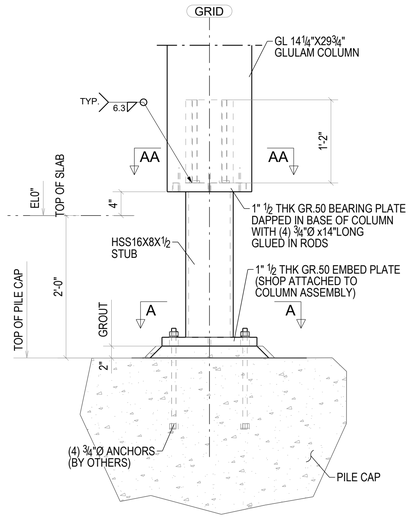

DETAIL 1A

REF. :1/S400
COLUMN BASE PLATE CONNECTION

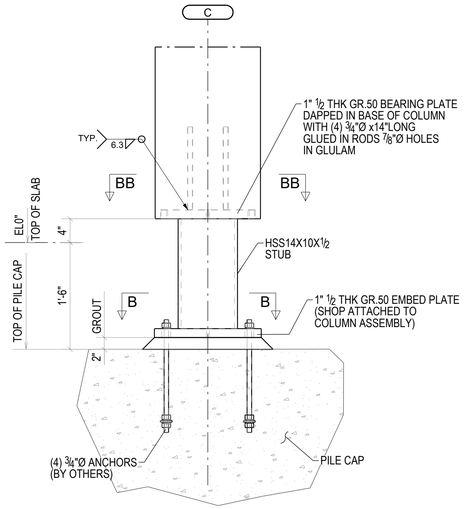

DETAIL 2H

REF. :1/S400
COLUMN BASE PLATE CONNECTION

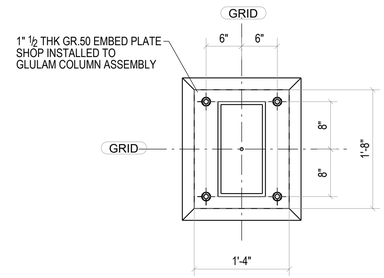

A - A

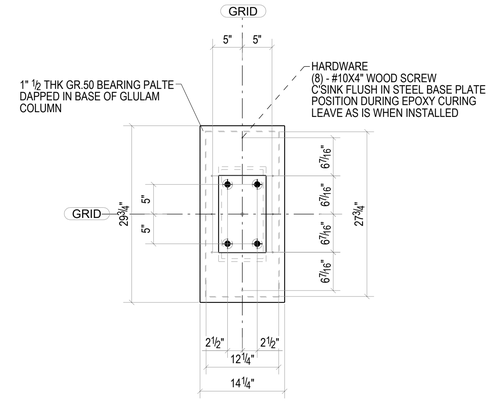

AA - AA

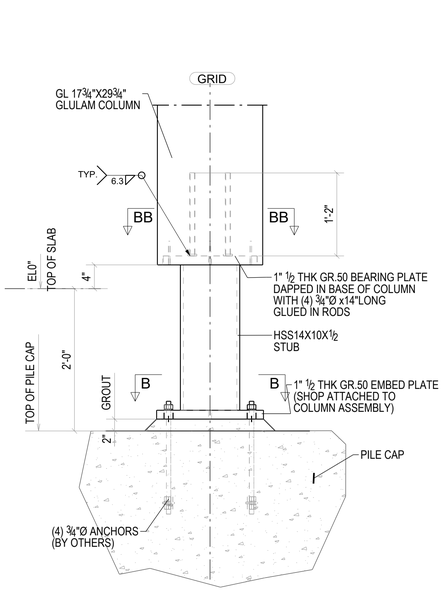

DETAIL 2

REF. :1/S400
COLUMN BASE PLATE CONNECTION

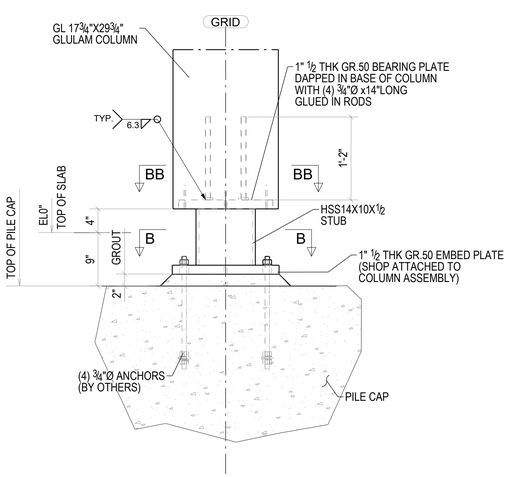

DETAIL 2A

REF. :1/S400
COLUMN BASE PLATE CONNECTION

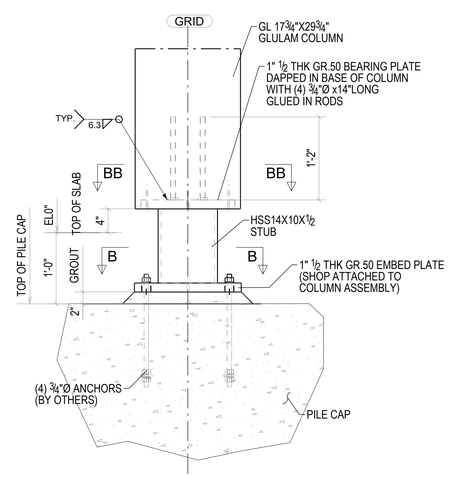

DETAIL 2B

REF. :1/S400
COLUMN BASE PLATE CONNECTION

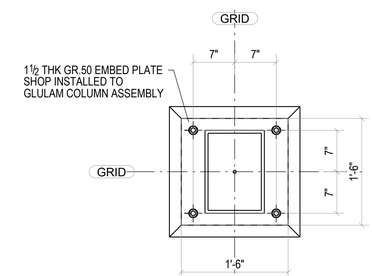

B - B

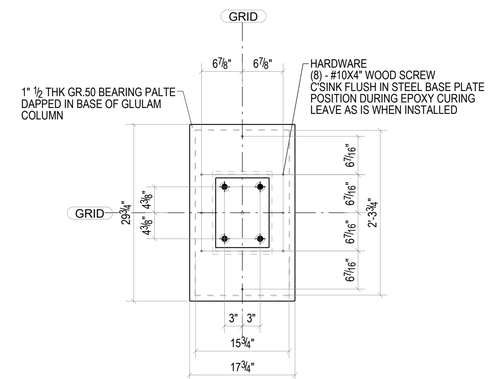

BB - BB

REV	DATE	REMARKS
0	04/30/2020	IFF
I	03/04/2020	Area B OFA 3
H	02/05/2020	Area B OFA
I	03/04/2020	Area B OFA
F	12/11/2019	Area A OFA
G	11/18/2019	Area B Geo.
F	11/15/2019	Area B Geo.
E	10/29/2019	Area B Geo.

Ref Dwg:

ISSUED IFF

DATE: 04/30/2020

STRUCTURLAM
MASS TIMBER CORPORATION
Intelligence In Wood

DATE 17/Oct/2019	SHEET	REV.	PROJECT
BY CMI	SL29	0	BORREGAS
DWG TITLE BASE CONNECTIONS			Job# 25991

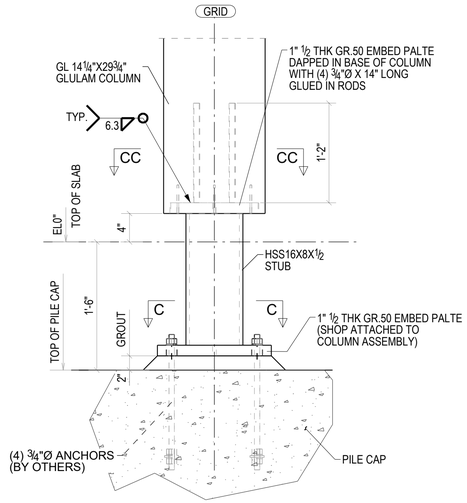

DETAIL 1B

REF: 2/S400
COLUMN BASE PLATE CONNECTION

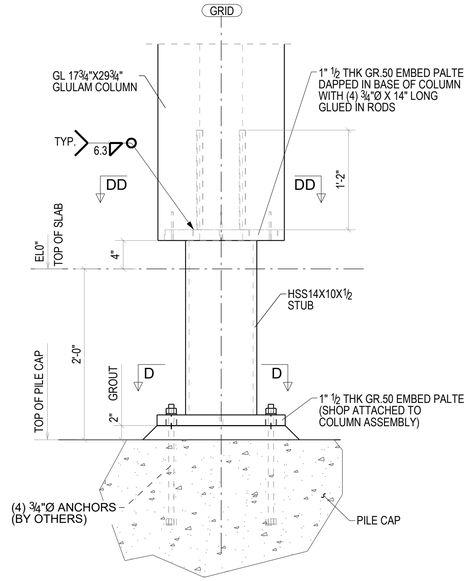

DETAIL 2C

REF: 2/S400
COLUMN BASE PLATE CONNECTION

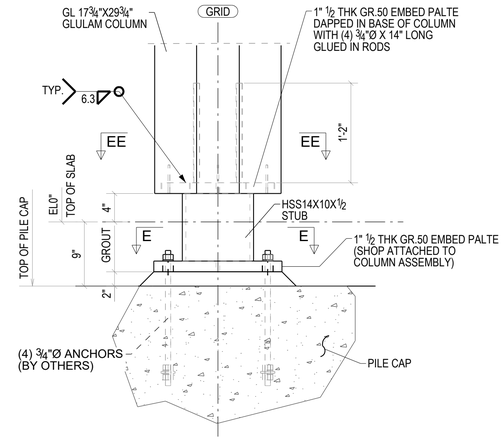

DETAIL 2D

REF: 2/S400
COLUMN BASE PLATE CONNECTION

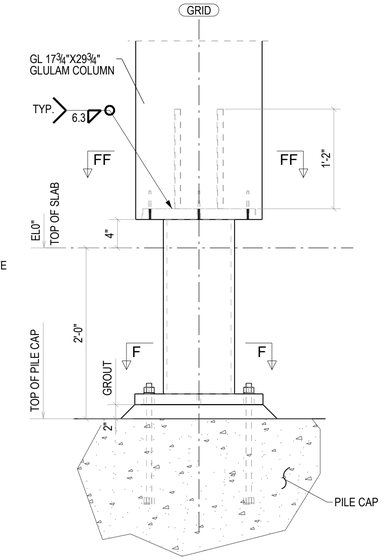

DETAIL 2F

REF: 2/S400
COLUMN BASE PLATE CONNECTION

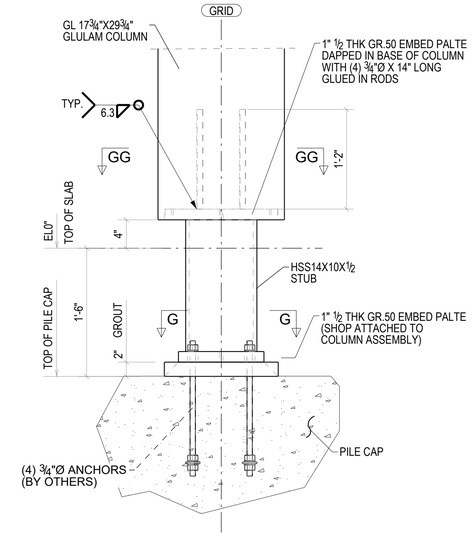

DETAIL 2G

REF: 2/S400
COLUMN BASE PLATE CONNECTION

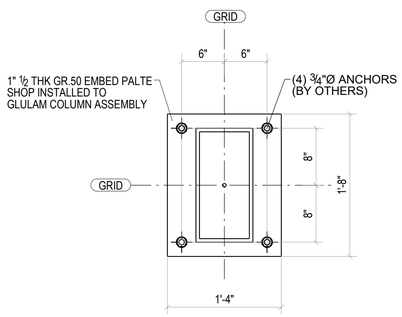

C - C

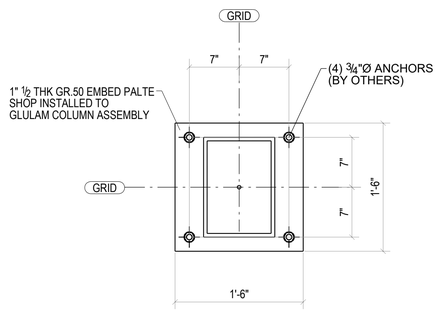

D - D

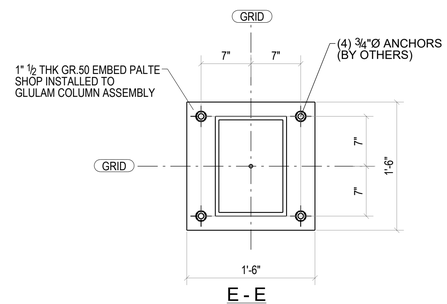

E - E

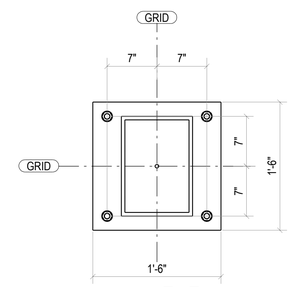

F - F

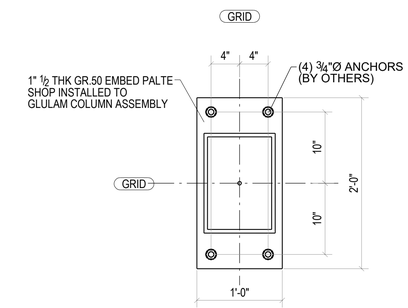

G - G

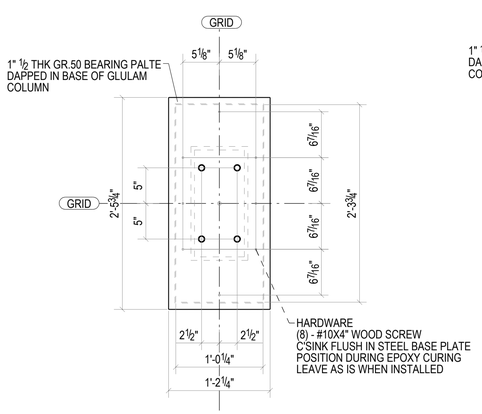

CC - CC

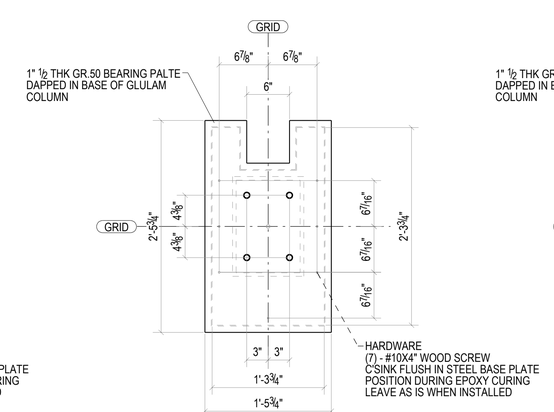

DD - DD

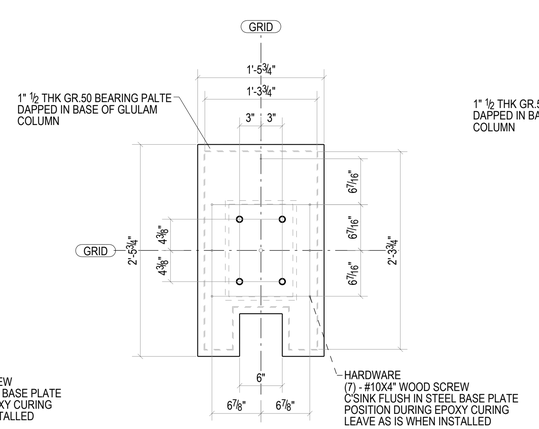

EE - EE

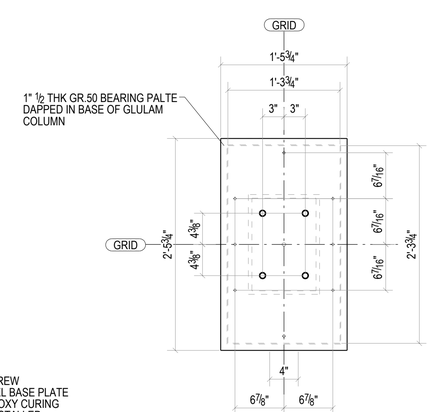

FF - FF

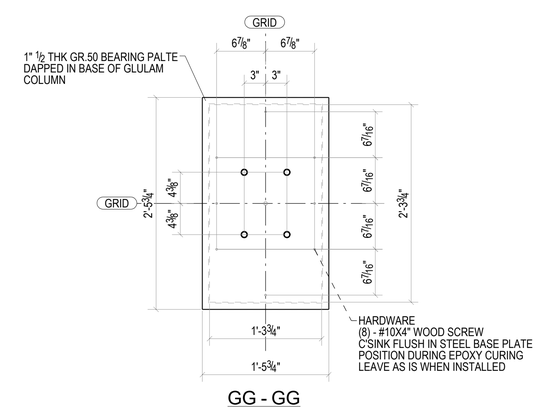

GG - GG

REV	DATE	REMARKS
0	04/30/2020	IFF
A	03/04/2020	Area B OFA

Ref Dwg:

ISSUED IFF

DATE: 04/30/2020

STRUCTURLAM
MASS TIMBER CORPORATION
Intelligence In Wood

DATE 04/Mar/2020	SHEET	REV.	PROJECT
BY JMI	SL29A	0	BORREGAS
DWG TITLE BASE CONNECTIONS			Job# 25991

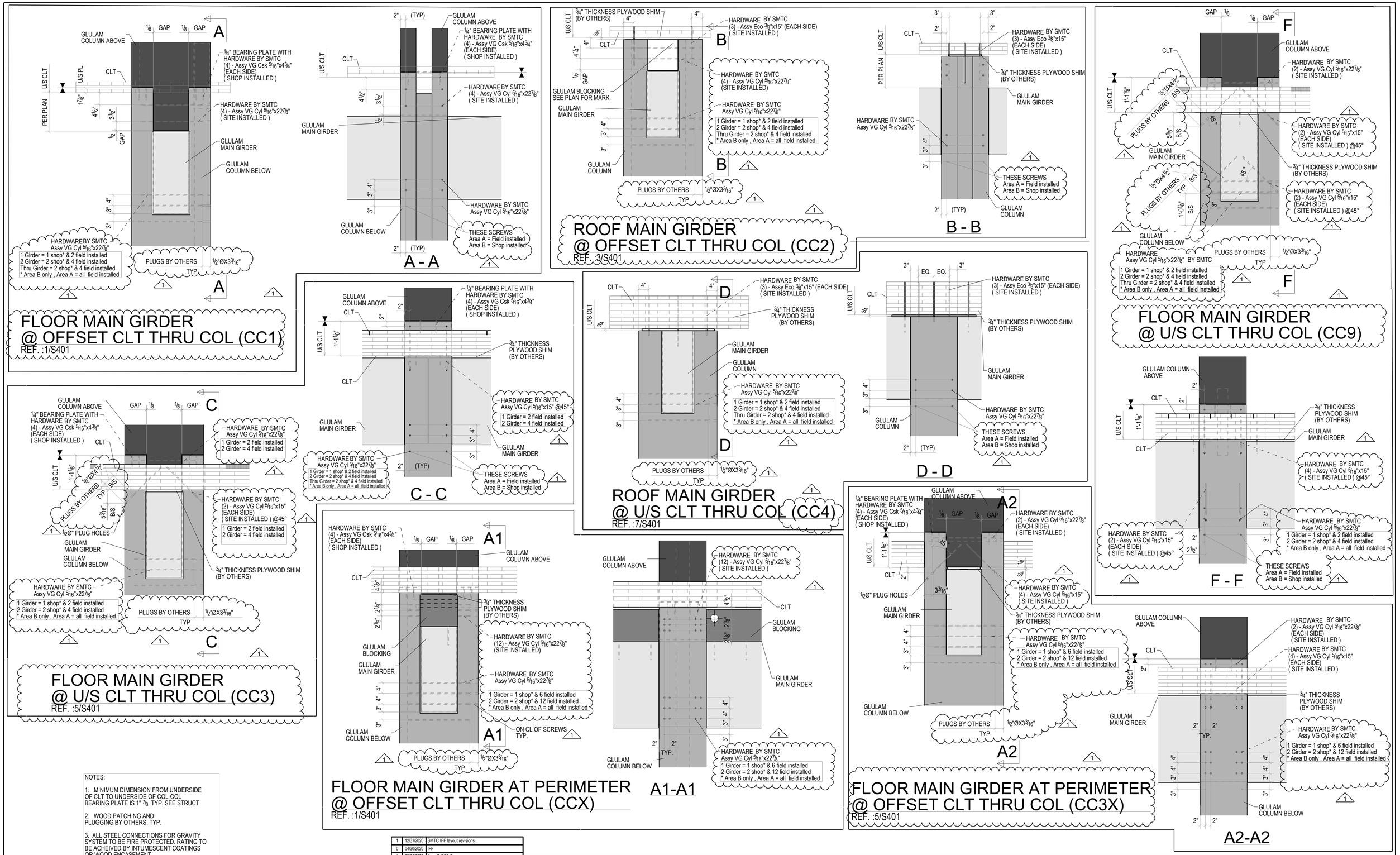

NOTES:

1. MINIMUM DIMENSION FROM UNDERSIDE OF CLT TO UNDERSIDE OF COL-COL BEARING PLATE IS 1" 7/8 TYP. SEE STRUCT

2. WOOD PATCHING AND PLUGGING BY OTHERS, TYP.

3. ALL STEEL CONNECTIONS FOR GRAVITY SYSTEM TO BE FIRE PROTECTED. RATING TO BE ACHEIVED BY INTUMESCENT COATINGS OR WOOD ENCASEMENT.

4. WOOD ENCASEMENT TO MEET DEPTH COVERAGE REQUIREMENTS; REFERENCE NDS SECTION 16.2.1 FOR EFFECTIVE CHAR RATES FOR FIRE ENDURANCE AND STRUCTURAL CALCULATION PACKAGE FOR CALCULATED CHAR RATE OF MASS TIMBER ELEMENTS

REV	DATE	REMARKS
1	12/31/2020	SMTC IFF layout revisions
0	04/30/2020	IFF
I	03/04/2020	Area B OFA 3
H	02/05/2020	Area B OFA
G	01/17/2020	Area A OFA glulam
F	12/11/2019	Area A OFA
H	11/18/2019	Area B Geo.
G	11/15/2019	Area B Geo.

Ref Dwg:

ISSUED SMTC IFF layo

DATE: 12/31/2020

STRUCTURLAM
MASS TIMBER CORPORATION
Intelligence In Wood

DATE 17/Oct/2019	SHEET	REV.	PROJECT
BY CMI	SL30	1	BORREGAS
DWG TITLE DETAILS & SECTIONS			Job# 25991

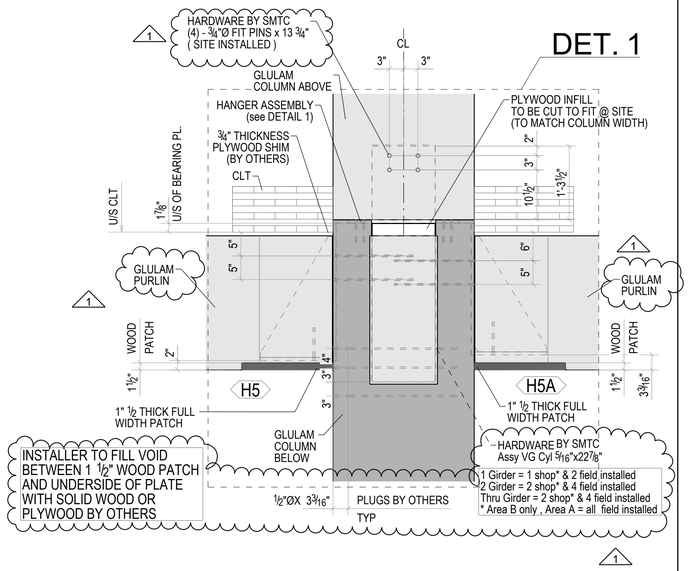

DOUBLE PURLIN TO COL CL @ U/S CLT CC5(D) (H5-H5A)

REF. :1/S402

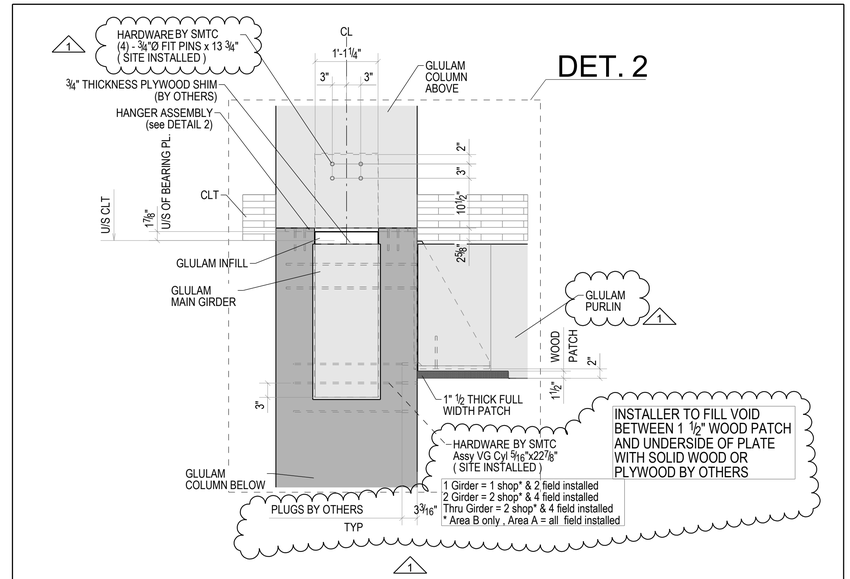

SINGLE PURLIN TO COL CL @ U/S CLT CC5(S) (H5)

REF. :2/S402

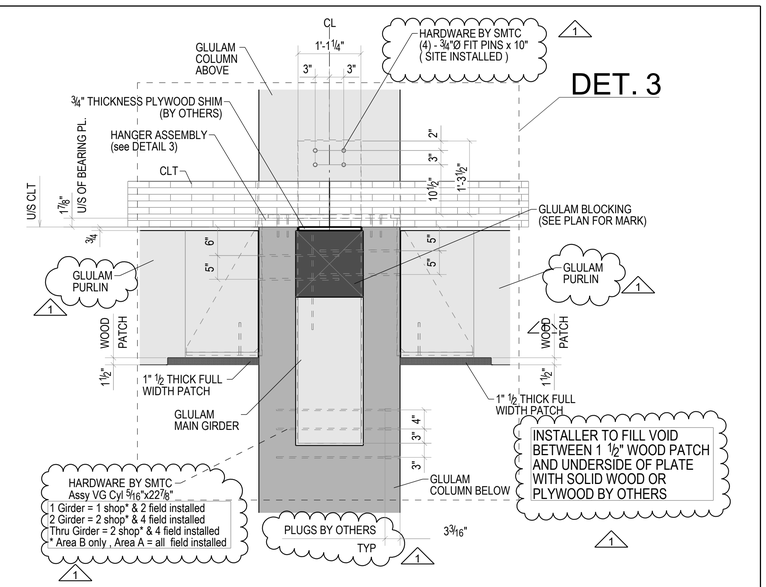

DOUBLE PURLIN TO COL CL @ U/S CLT CC6(D) (H5-H5)

REF. :3/S402

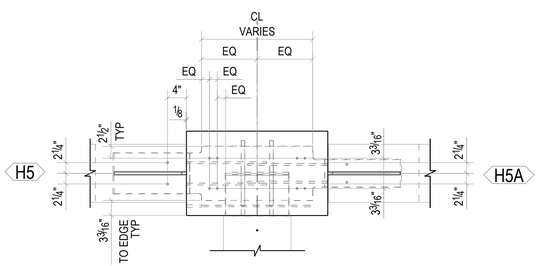

F1 - F1

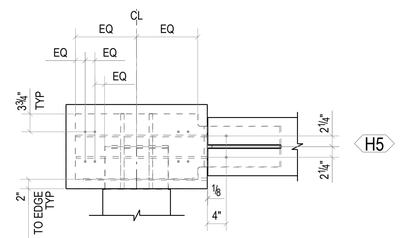

G1 - G1

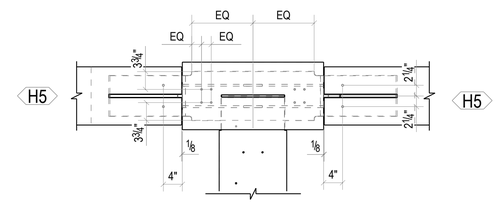

H1 - H1

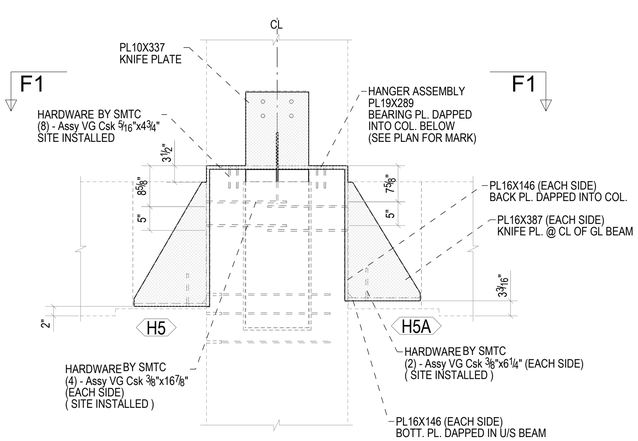

DETAIL 1

REF. :1B/S402

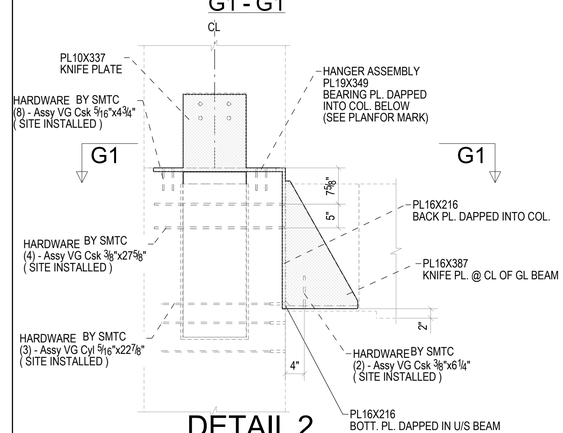

DETAIL 2

REF. :1A/S402

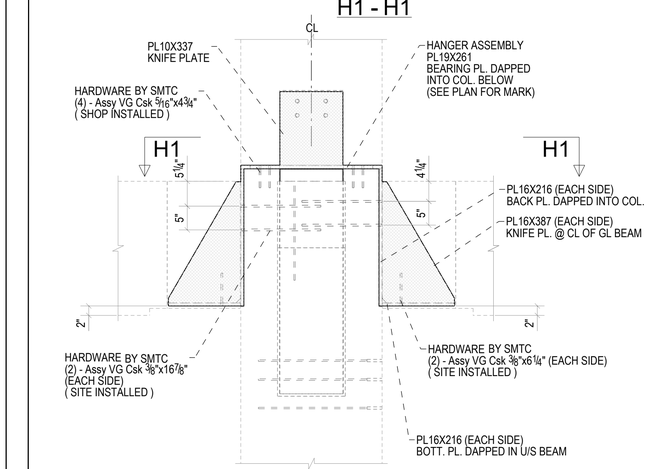

DETAIL 3

REF. :1A/S402

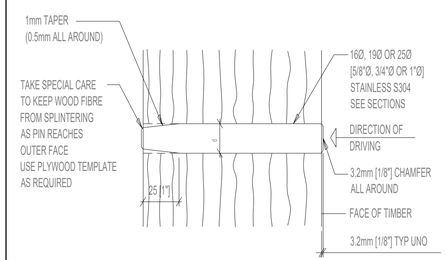

TIGHT FIT PIN

NOTES:

1. MINIMUM DIMENSION FROM UNDERSIDE OF CLT TO UNDERSIDE OF COL-COL BEARING PLATE IS 1" ⅞ TYP. SEE STRUCT

2. WOOD PATCHING AND PLUGGING BY OTHERS, TYP.

3. ALL STEEL CONNECTIONS FOR GRAVITY SYSTEM TO BE FIRE PROTECTED. RATING TO BE ACHEIVED BY INTUMESCENT COATINGS OR WOOD ENCASEMENT BY OTHERS.

4. WOOD ENCASEMENT TO MEET DEPTH COVERAGE REQUIREMENTS; REFERENCE NDS SECTION 16.2.1 FOR EFFECTIVE CHAR RATES FOR FIRE ENDURANCE AND STRUCTURAL CALCULATION PACKAGE FOR CALCULATED CHAR RATE OF MASS TIMBER ELEMENTS

REV	DATE	REMARKS
1	12/31/2020	SMTC IFF layout revisions
0	04/30/2020	IFF
I	03/04/2020	Area B OFA 3
H	02/05/2020	Area B OFA
G	01/17/2020	Area A OFA glulam
F	12/11/2019	Area A OFA
E	11/18/2019	Area B Geo.
D	11/08/2019	Area B Geo.

Ref Dwg:

ISSUED SMTC IFF layo

DATE: 12/31/2020

STRUCTURLAM
MASS TIMBER CORPORATION
Intelligence In Wood

DATE 17/Oct/2019	SHEET	REV.	PROJECT
BY CMI	SL31	1	BORREGAS
DWG TITLE DETAILS & SECTIONS			Job# 25991

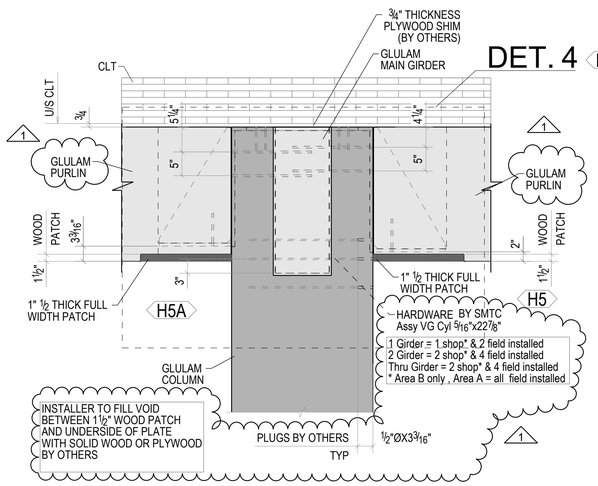

DOUBLE PURLIN TO COL CL @U/S CLT CC7(D) @ROOF (H5-H5A)

REF. :5/S402

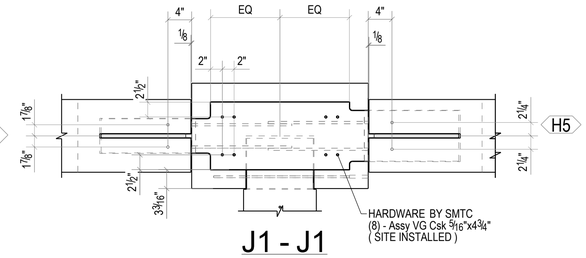

J1 - J1

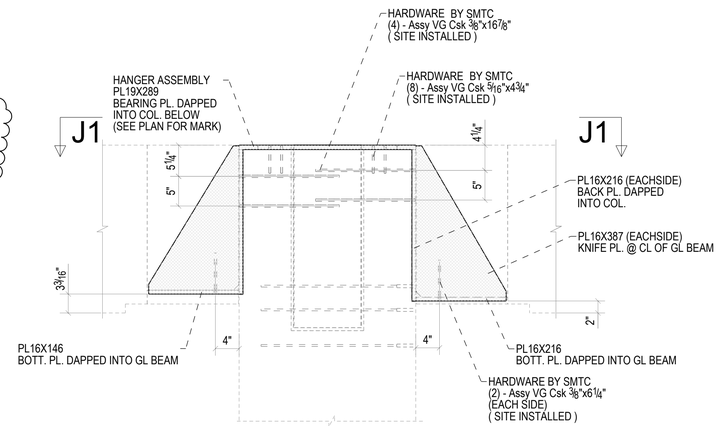

DETAIL 4

REF. :1A/S402

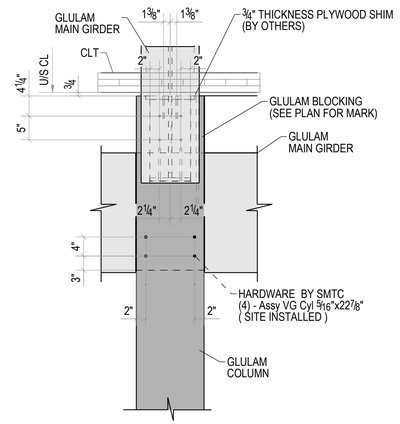

PERPENDICULAR BEAM NOT SHOWN FOR CLARITY

L - L

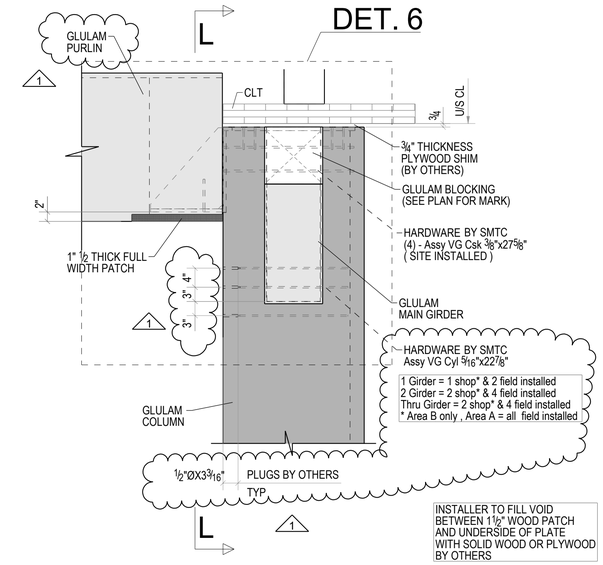

SINGLE PURLIN TO COL CL @OFFSET CLT CC8(S) @ROOF

REF. :7/S402

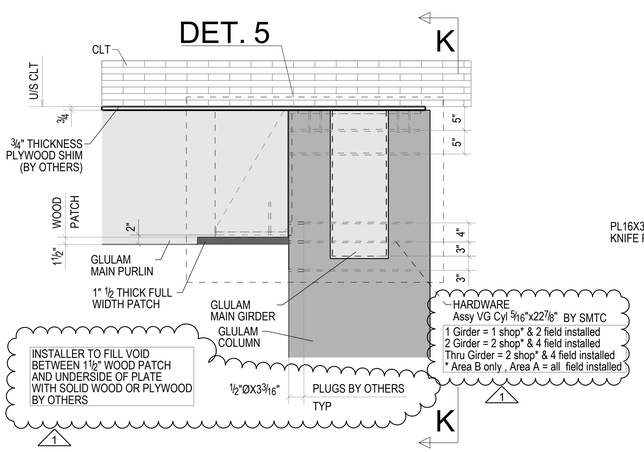

SINGLE PURLIN TO COL CL @U/S CLT CC7(S) @ROOF (H5)

REF. :6/S402

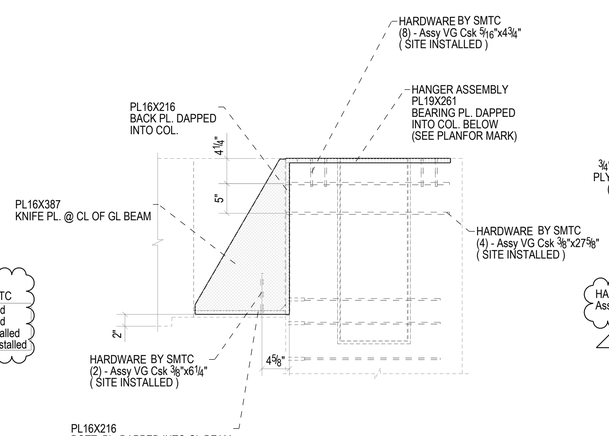

DETAIL 5

REF. :1A/S402

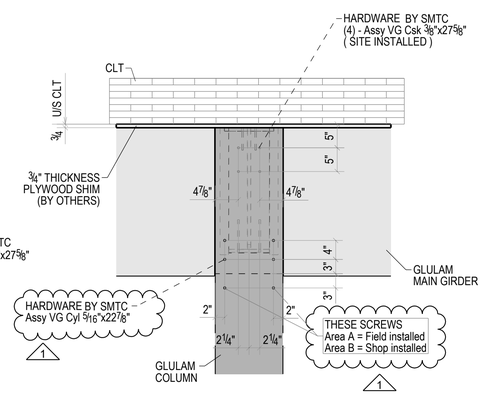

K - K

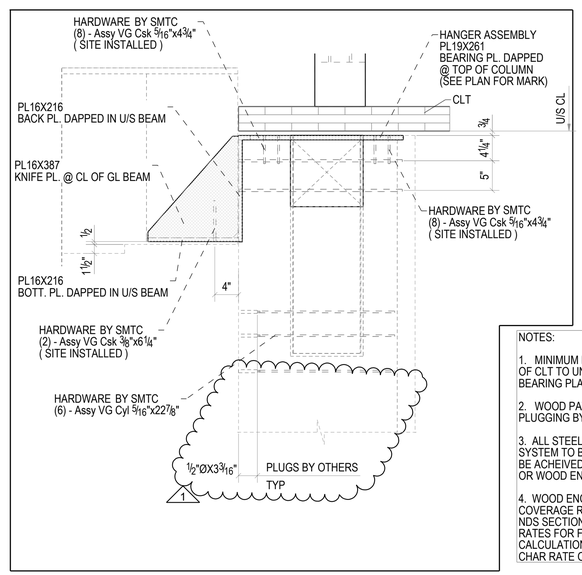

NOTES:

1. MINIMUM DIMENSION FROM UNDERSIDE OF CLT TO UNDERSIDE OF COL-COL BEARING PLATE IS 1" ⅞ TYP. SEE STRUCT
2. WOOD PATCHING AND PLUGGING BY OTHERS, TYP.
3. ALL STEEL CONNECTIONS FOR GRAVITY SYSTEM TO BE FIRE PROTECTED. RATING TO BE ACHEIVED BY INTUMESCENT COATINGS OR WOOD ENCASEMENT.
4. WOOD ENCASEMENT TO MEET DEPTH COVERAGE REQUIREMENTS; REFERENCE NDS SECTION 16.2.1 FOR EFFECTIVE CHAR RATES FOR FIRE ENDURANCE AND STRUCTURAL CALCULATION PACKAGE FOR CALCULATED CHAR RATE OF MASS TIMBER ELEMENTS

DETAIL 6

REF. :1A/S402

REV	DATE	REMARKS
1	12/31/2020	SMTC IFF layout revisions
0	04/30/2020	IFF
I	03/04/2020	Area B OFA 3
H	02/05/2020	Area B OFA
G	01/17/2020	Area A OFA glulam
F	12/11/2019	Area A OFA
A	11/28/2019	Area B OFA

Ref Dwg:

ISSUED SMTC IFF layo

DATE: 12/31/2020

STRUCTURLAM
MASS TIMBER CORPORATION
Intelligence In Wood

DATE 18/Oct/2019

BY CMI

SHEET SL32

REV. 1

DWG TITLE DETAILS & SECTIONS

PROJECT:

BORREGAS

Job# 25991

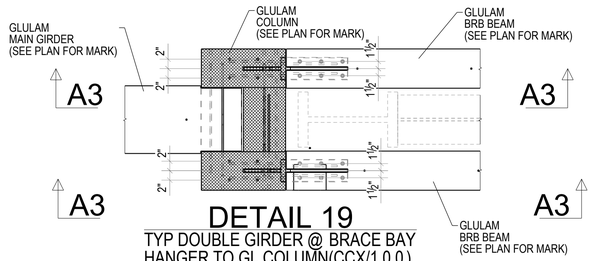

DETAIL 19

TYP DOUBLE GIRDER @ BRACE BAY
HANGER TO GL COLUMN(CCX/1.0.0)
@ AREA B FLOOR LEVEL

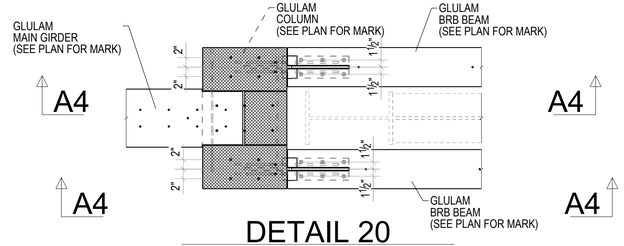

DETAIL 20

TYP DOUBLE GIRDER @ BRACE BAY
HANGER TO GL COLUMN(CCX/1.0.0)
@ AREA B ROOF LEVEL

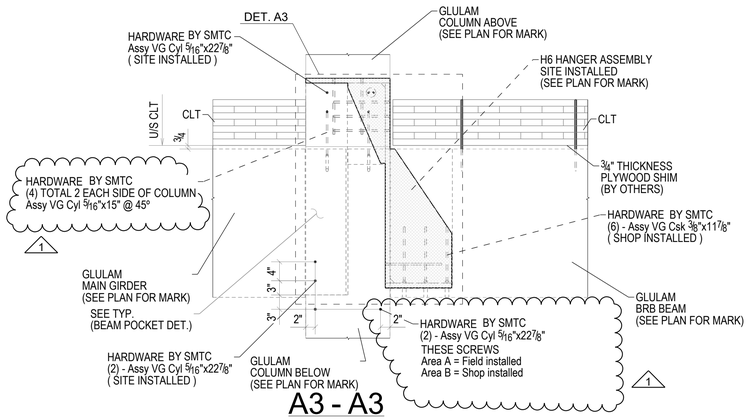

A3 - A3

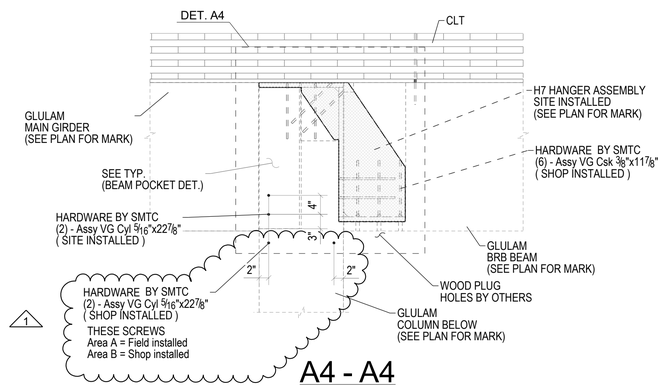

A4 - A4

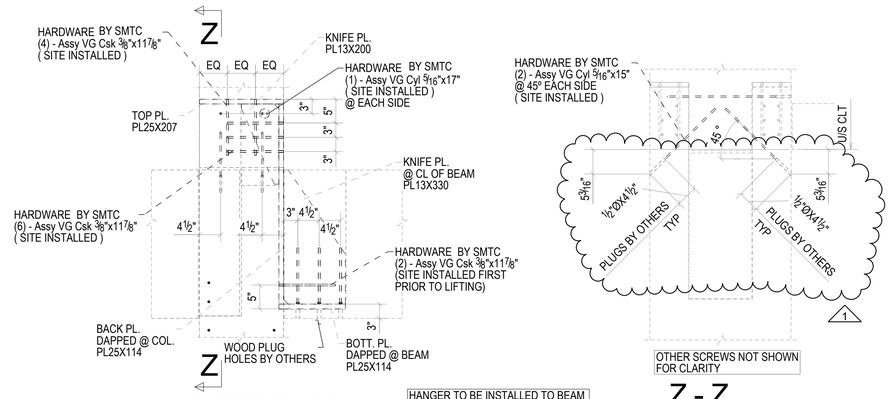

DETAIL A3

Z - Z

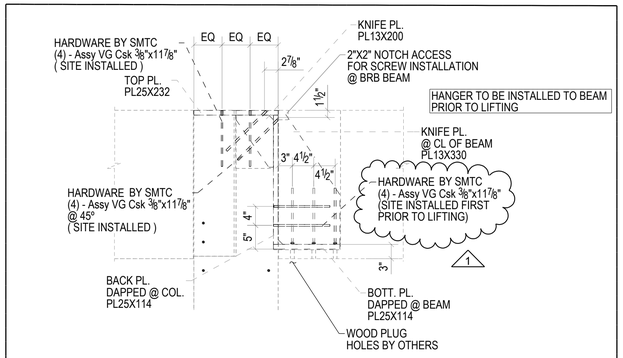

DETAIL A4

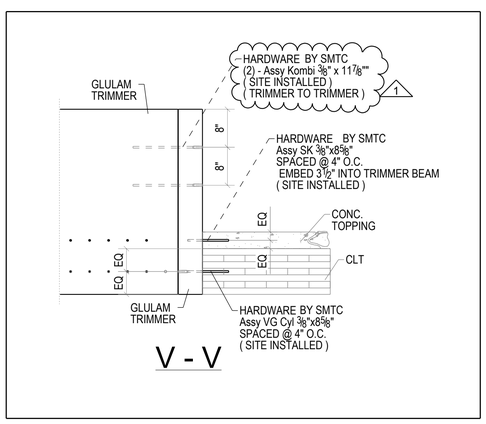

V - V

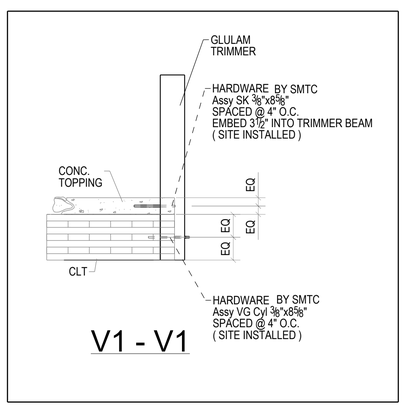

V1 - V1

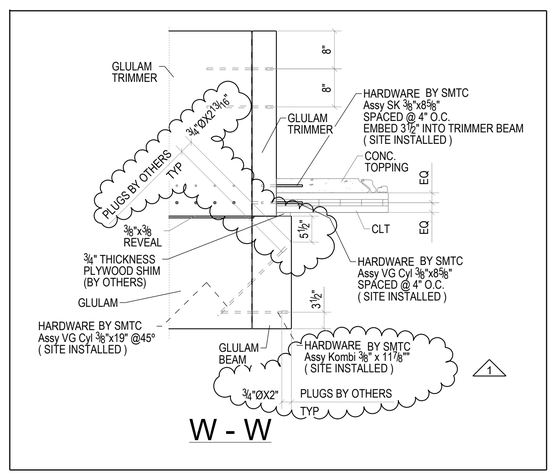

W - W

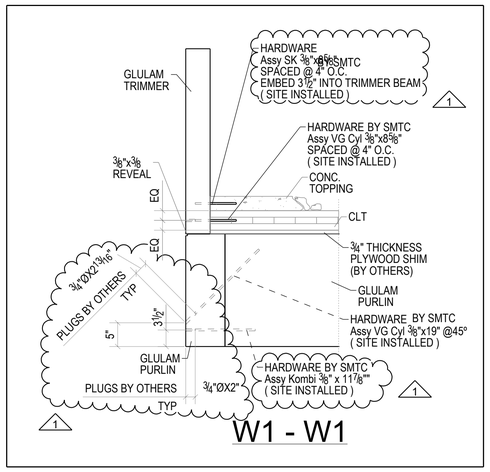

W1 - W1

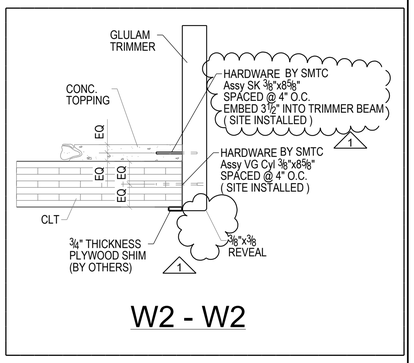

W2 - W2

NOTES:

1. MINIMUM DIMENSION FROM UNDERSIDE OF CLT TO UNDERSIDE OF COL-COL BEARING PLATE IS 1" 7/8 TYP. SEE STRUCT

2. WOOD PATCHING AND PLUGGING BY OTHERS, TYP.

3. ALL STEEL CONNECTIONS FOR GRAVITY SYSTEM TO BE FIRE PROTECTED. RATING TO BE ACHEIVED BY INTUMESCENT COATINGS OR WOOD ENCASEMENT.

4. WOOD ENCASEMENT TO MEET DEPTH COVERAGE REQUIREMENTS; REFERENCE NDS SECTION 16.2.1 FOR EFFECTIVE CHAR RATES FOR FIRE ENDURANCE AND STRUCTURAL CALCULATION PACKAGE FOR CALCULATED CHAR RATE OF MASS TIMBER ELEMENTS

REV	DATE	REMARKS
1	12/31/2020	SMTC IFF layout revisions
0	04/30/2020	IFF
F	03/04/2020	Area B OFA 3
E	02/05/2020	Area B OFA
D	01/17/2020	Area A OFA glulam
C	12/11/2019	Area B OFA

Ref Dwg:

ISSUED SMTC IFF layo

DATE: 12/31/2020

STRUCTURLAM
MASS TIMBER CORPORATION
Intelligence In Wood

DATE 15/Nov/2019	SHEET	REV.	PROJECT
BY VFE	SL33	1	BORREGAS
DWG TITLE DETAILS & SECTIONS			Job# 25991

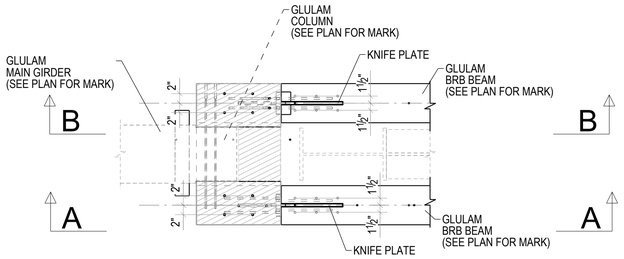

DETAIL 21

TYP DOUBLE GIRDER @ BRACE BAY
HANGER TO GL COLUMN(CCX/1.0.0)
@ ROOF LEVEL ALONG GRIDLINE 2

THIS CONNECTOR WILL NOT BE SHOP INSTALLED DUE TO GEOMETRY.
FIELD INSTALL PRIOR TO INSTALLATION OF ASSEMBLY

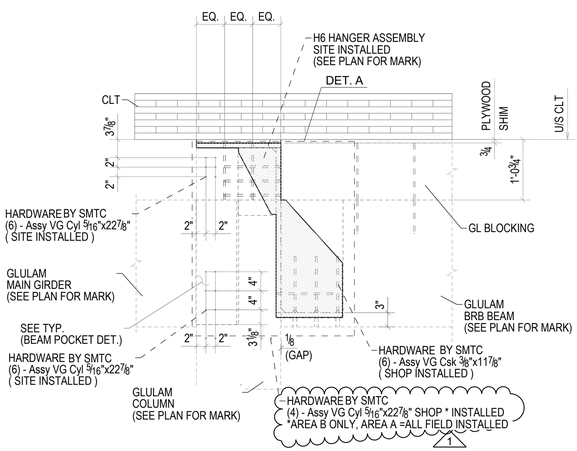

A - A

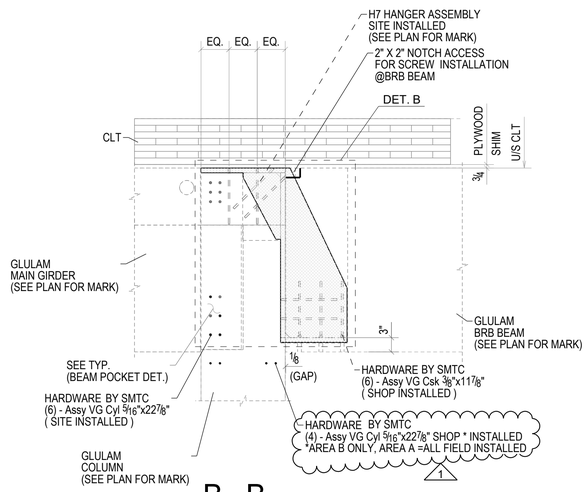

B - B

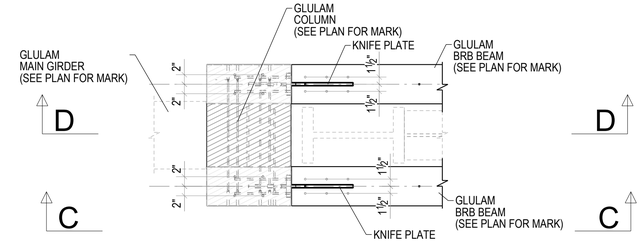

DETAIL 22

TYP DOUBLE GIRDER @ BRACE BAY
HANGER TO GL COLUMN(CCX/1.0.0)
@ FLOOR LEVEL ALONG GRIDLINE 2

THIS CONNECTOR WILL NOT BE SHOP INSTALLED DUE TO GEOMETRY.
FIELD INSTALL PRIOR TO INSTALLATION OF ASSEMBLY

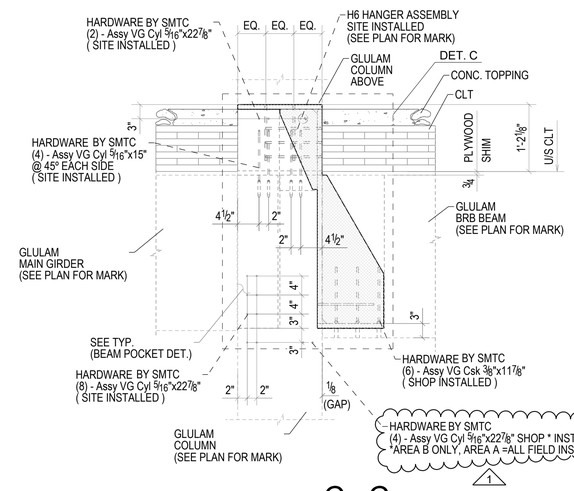

C - C

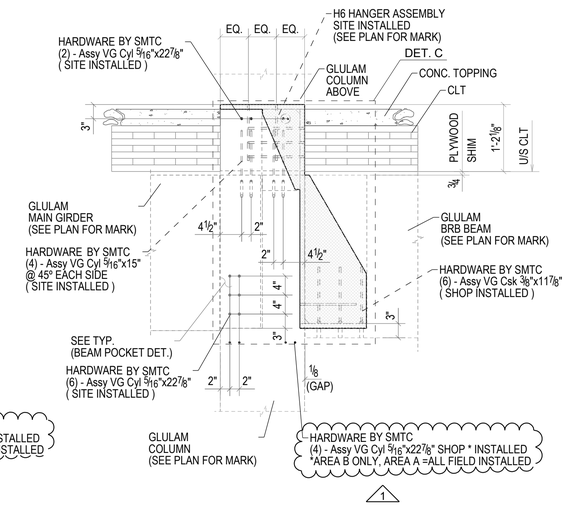

D - D

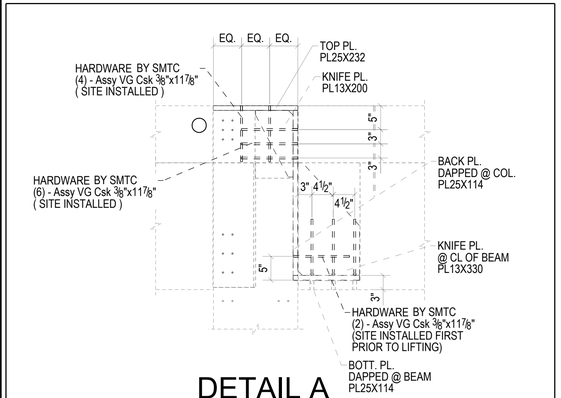

DETAIL A

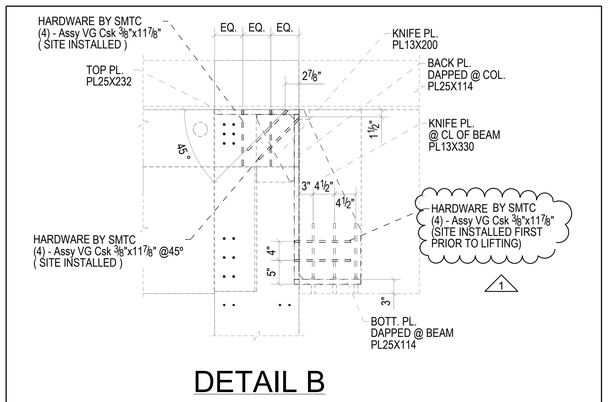

DETAIL B

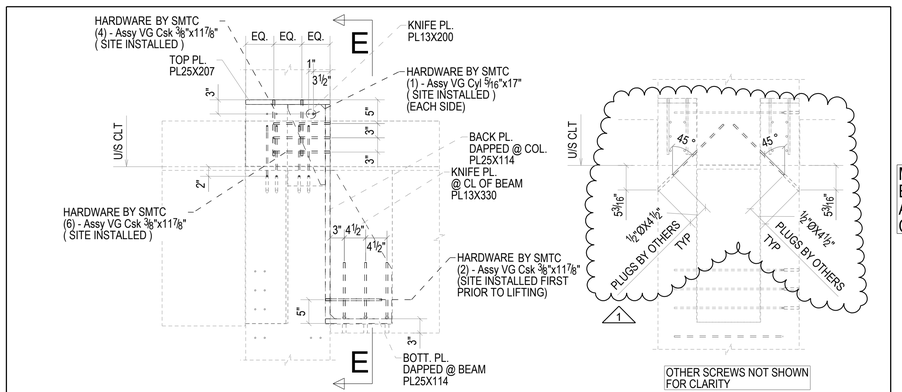

DETAIL C

E - E

MGA GENERAL NOTE:
ENSURE ALL STEEL TO TIMBER CONNECTION ARE PROVIDED WITH MINIMUM WOOD COVERAGE TO ACHIEVE FIRE RATING

NOTES:

1. MINIMUM DIMENSION FROM UNDERSIDE OF CLT TO UNDERSIDE OF COL-COL BEARING PLATE IS 1-⅞" TYP. SEE STRUCT
2. WOOD PATCHING AND PLUGGING BY OTHERS, TYP.
3. ALL STEEL CONNECTIONS FOR GRAVITY SYSTEM TO BE FIRE PROTECTED. RATING TO BE ACHEIVED BY INTUMESCENT COATINGS OR WOOD ENCASEMENT.
4. WOOD ENCASEMENT TO MEET DEPTH COVERAGE REQUIREMENTS; REFERENCE NDS SECTION 16.2.1 FOR EFFECTIVE CHAR RATES FOR FIRE ENDURANCE AND STRUCTURAL CALCULATION PACKAGE FOR CALCULATED CHAR RATE OF MASS TIMBER ELEMENTS

REV	DATE	REMARKS
1	12/31/2020	SMTC IFF layout revisions
0	04/30/2020	IFF
F	03/04/2020	Area B OFA 3
E	02/05/2020	Area B OFA
D	01/17/2020	Area A OFA glulam
C	12/11/2019	Area B OFA

Ref Dwg:

ISSUED SMTC IFF layo

DATE: 12/31/2020

STRUCTURLAM
MASS TIMBER CORPORATION
Intelligence In Wood

DATE 13/Nov/2019	SHEET	REV.	PROJECT
BY CMI	SL34	1	BORREGAS
DWG TITLE DETAILS & SECTIONS			Job# 25991

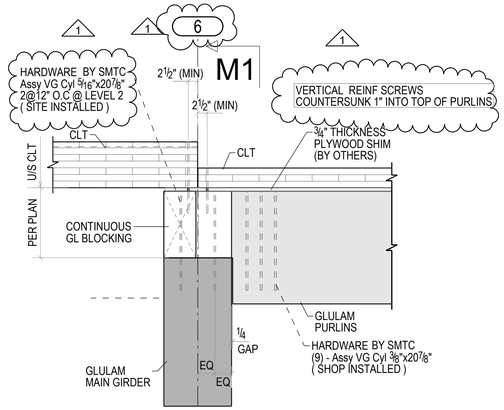

M1

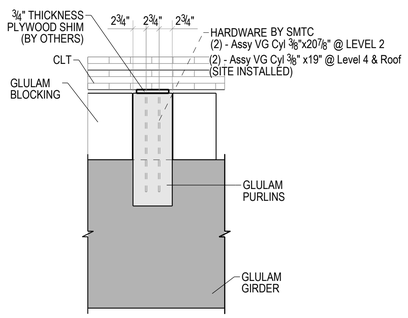

M1 - M1

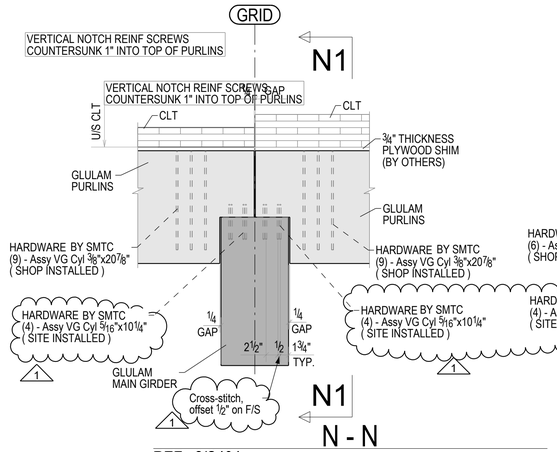

N - N

REF. :2/S404
TYP. NOTCHED PURLIN TO MAIN GIRDER CONNECTION
(@ LEVEL 2 AND 4)

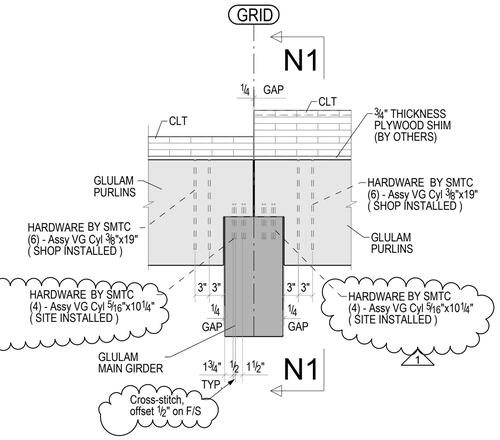

P - P

REF. :2/S404
TYP @ ROOF PURLIN NOTCHES CONN

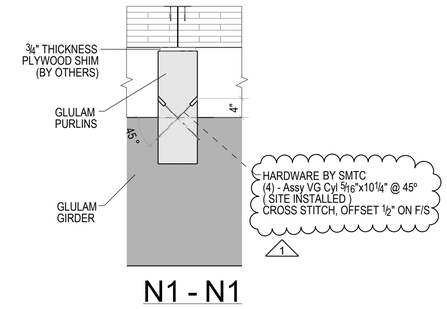

N1 - N1

M - M

REF. :2/S404
TYP @ LEVEL 2 GRID LINE 6 NOTCHED PURLIN
TO MAIN GIRDER CONN

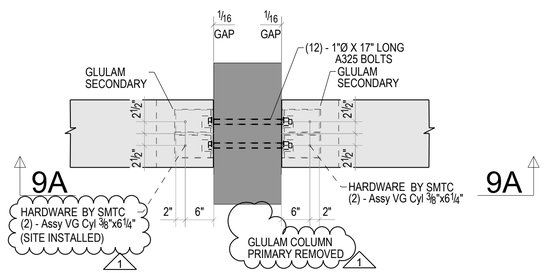

DETAIL 9

REF. :8/S401
TYP. BEAM TO CONT COLUMN DETAIL

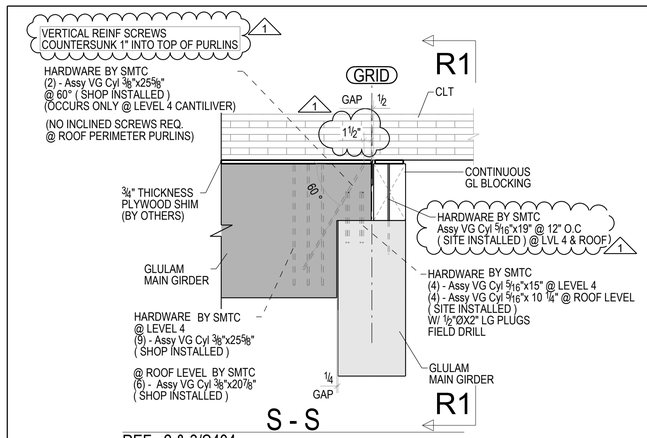

S - S

REF. :2 & 3/S404
TYP @ PURLIN NOTCHES CONN @ CANTILEVER

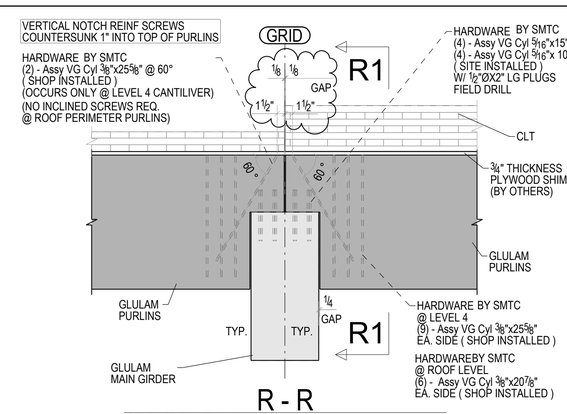

R - R

REF. :2 & 3/S404
TYP PURLIN NOTCHES CONN @ CANTILEVER
LEVEL 4 & ROOF

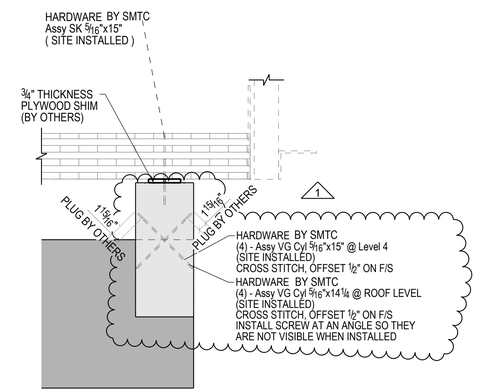

R1 - R1

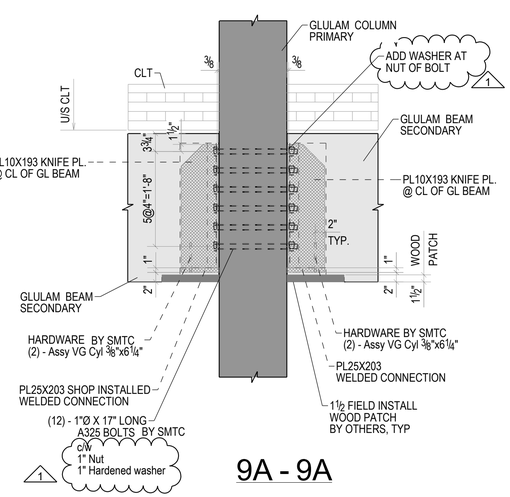

9A - 9A

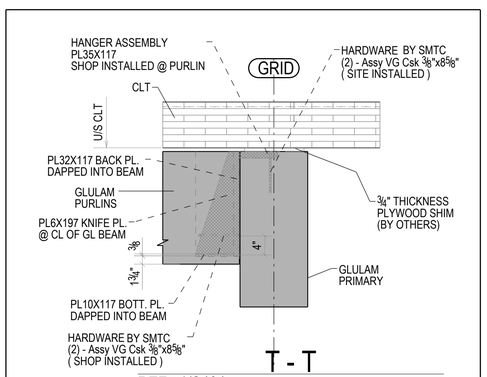

T - T

REF. :1/S404
TYP @ GL PURLIN FLUSH TO MAIN GIRDER
(@ AREA A)
(SEE H1 HANGER DETAILS 11/SL39)

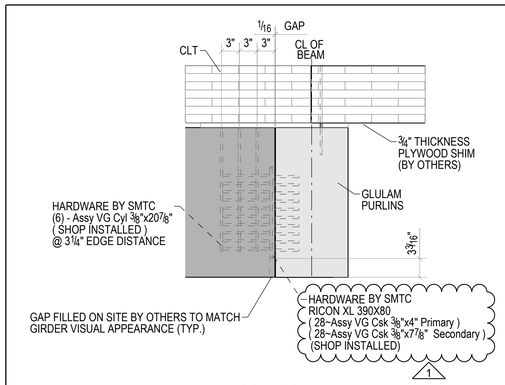

U - U

REF. :4/S404
TYP FLOOR OPENING BEAM TO BEAM/MAIN GIRDER
CONNECTION @ AREA B

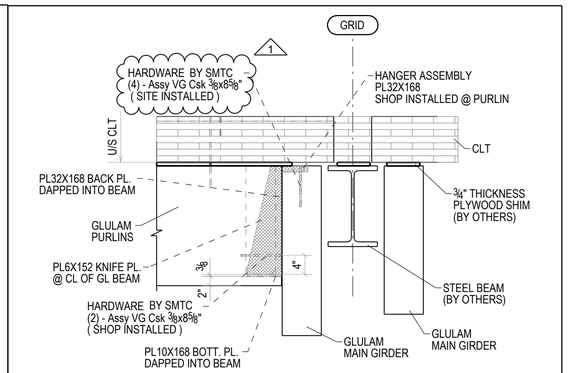

Q - Q

REF. :6/S404; 6A/S404
TYP. GL PURLIN TO GIRDER CONNECTION
(@ AREA B)
(SEE H2 HANGER DETAILS 12/SL40)

NOTES:

1. MINIMUM DIMENSION FROM UNDERSIDE OF CLT TO UNDERSIDE OF COL-COL BEARING PLATE IS 1 7/8" TYP. SEE STRUCT

2. WOOD PATCHING AND PLUGGING BY OTHERS, TYP.

3. ALL STEEL CONNECTIONS FOR GRAVITY SYSTEM TO BE FIRE PROTECTED. RATING TO BE ACHEIVED BY INTUMESCENT COATINGS OR WOOD ENCASEMENT.

4. WOOD ENCASEMENT TO MEET DEPTH COVERAGE REQUIREMENTS; REFERENCE NDS SECTION 16.2.1 FOR EFFECTIVE CHAR RATES FOR FIRE ENDURANCE AND STRUCTURAL CALCULATION PACKAGE FOR CALCULATED CHAR RATE OF MASS TIMBER ELEMENTS

REV	DATE	REMARKS
1	12/31/2020	SMTC IFF layout revisions
0	04/30/2020	IFF
D	03/04/2020	Area B OFA 3
C	02/05/2020	Area B OFA
B	01/17/2020	Area A OFA glulam
A	12/11/2019	Area B OFA

Ref Dwg:

ISSUED SMTC IFF layo

DATE: 12/31/2020

STRUCTURLAM
MASS TIMBER CORPORATION
Intelligence In Wood

DATE 28/Nov/2019	SHEET	REV.	PROJECT
BY CMI	SL35	1	BORREGAS
DWG TITLE DETAILS & SECTIONS			Job# 25991

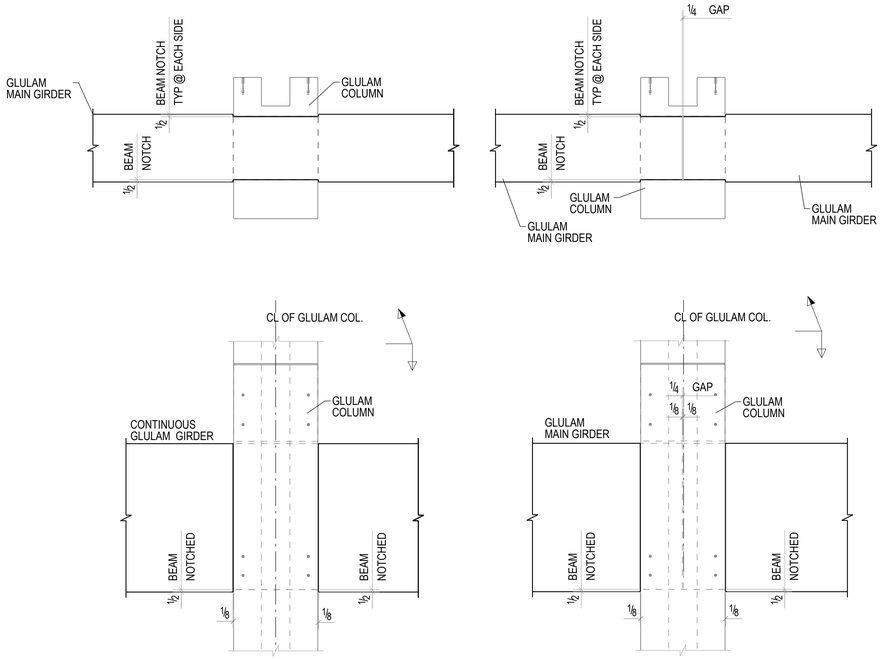

TYP. GIRDER NOTCHED THRU COLUMN CLEARANCES

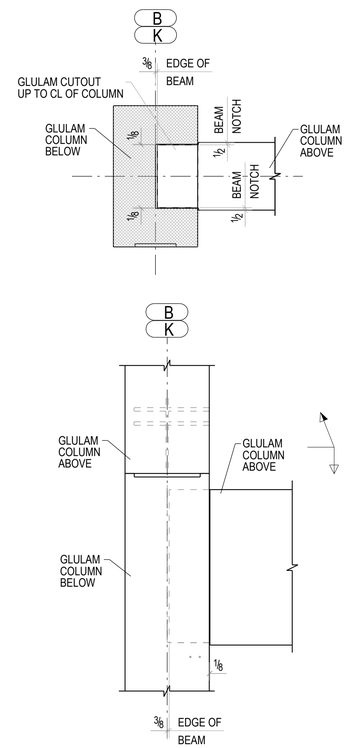

TYP. COLUMN POCKET DETAIL

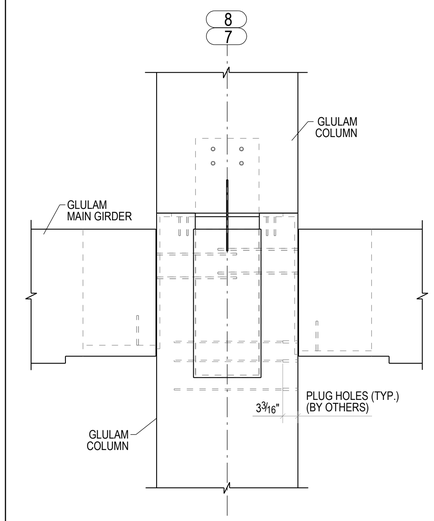

TYP. COLUMN PLUG HOLES DETAIL

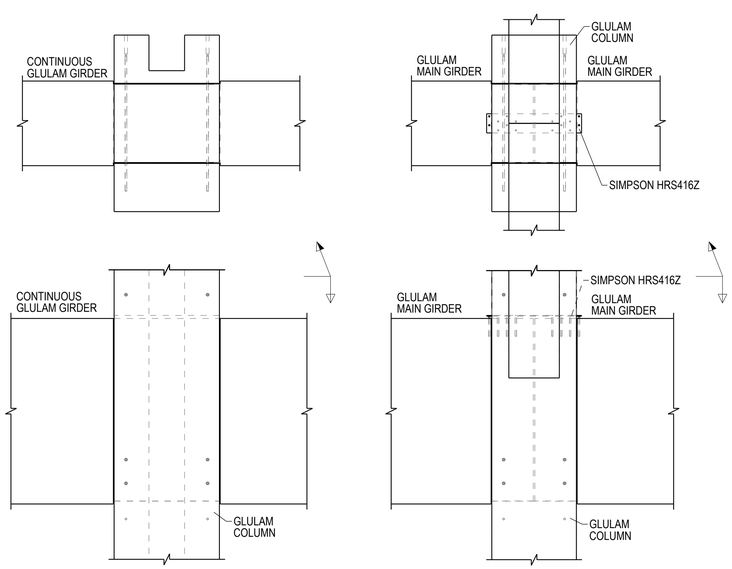

TYP. GIRDER CONN THRU COLUMN
(SIMPSON HRS416Z)

NOTES:

1. MINIMUM DIMENSION FROM UNDERSIDE OF CLT TO UNDERSIDE OF COL-COL BEARING PLATE IS 1" 7/8 TYP. SEE STRUCT

2. WOOD PATCHING AND PLUGGING BY OTHERS, TYP.

3. ALL STEEL CONNECTIONS FOR GRAVITY SYSTEM TO BE FIRE PROTECTED. RATING TO BE ACHEIVED BY INTUMESCENT COATINGS OR WOOD ENCASEMENT.

4. WOOD ENCASEMENT TO MEET DEPTH COVERAGE REQUIREMENTS; REFERENCE NDS SECTION 16.2.1 FOR EFFECTIVE CHAR RATES FOR FIRE ENDURANCE AND STRUCTURAL CALCULATION PACKAGE FOR CALCULATED CHAR RATE OF MASS TIMBER ELEMENTS

REV	DATE	REMARKS
1	12/31/2020	SMTC IFF layout revisions
D	03/04/2020	Area B OFA 3
C	02/05/2020	Area B OFA
B	01/17/2020	Area A OFA glulam
A	12/11/2019	Area B OFA

Ref Dwg:

ISSUED SMTC IFF layo

DATE: 12/31/2020

STRUCTURLAM
MASS TIMBER CORPORATION
Intelligence In Wood

DATE 11/Dec/2019	SHEET	REV.	PROJECT
BY JMI	SL36	1	BORREGAS
DWG TITLE DETAILS & SECTIONS			Job# 25991

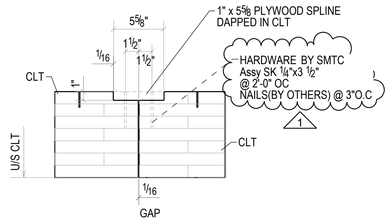

DETAIL 1

REF. :7/S405
TYP CLT TO CLT SPLINE CONN.
FOR 7-PLY & 9-PLY

WHEN SPLINE ARE USED OVER A GLULAM BEAM REFER TO TYPICAL CLT TO GLULAM CONNECTION FOR SCREW TYPE

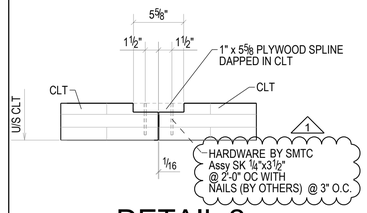

DETAIL 2

REF. :7/S405
TYP CLT TO CLT SPLINE CONN.
FOR 3-PLY

WHEN SPLINE ARE USED OVER A GLULAM BEAM REFER TO TYPICAL CLT TO GLULAM CONNECTION FOR SCREW TYPE

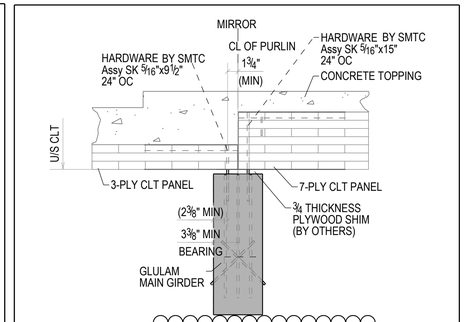

DETAIL 3

REF. :12/S405
TYP 7-PLY TO 3-PLY CLT
@ CLT ENDS

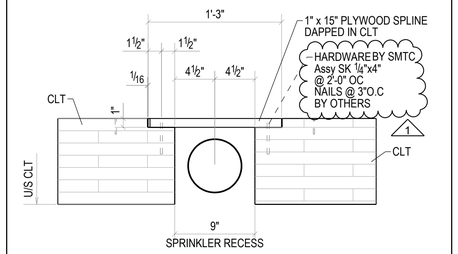

DETAIL 4

REF. :5/S405
TYP FLOOR CLT PANEL JOINT CONN
@ SPRINKLER RECESS

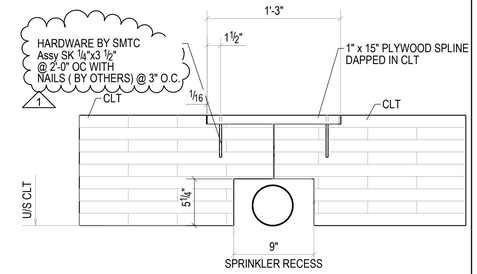

DETAIL 5

REF. :8/S405
TYP ROOF CLT PANEL JOINT CONN
@ SPRINKLER RECESS

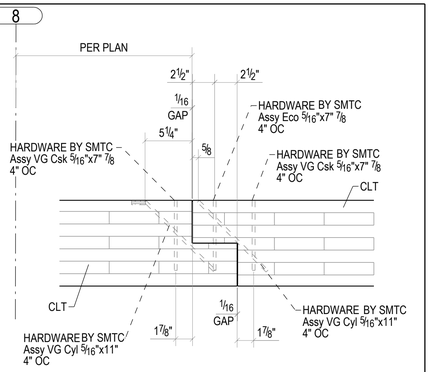

DETAIL 6

REF. :3/S405
TYP CLT FLOOR PANEL LAP JOINT
@ PARALLEL SPAN DIR

FULLY THREADED (VG) SCREWS SHOP INSTALLED BEFORE ERECTION.

USE 45° JIG FOR INCLINED VG SCREWS

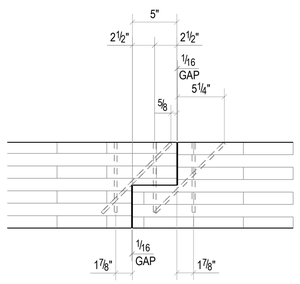

DETAIL 6A

REF. :3/S405
TYP CLT FLOOR PANEL LAP JOINT
@ PERP SPAN DIR

FULLY THREADED (VG) SCREWS SHOP INSTALLED BEFORE ERECTION.

USE 45° JIG FOR INCLINED VG SCREWS

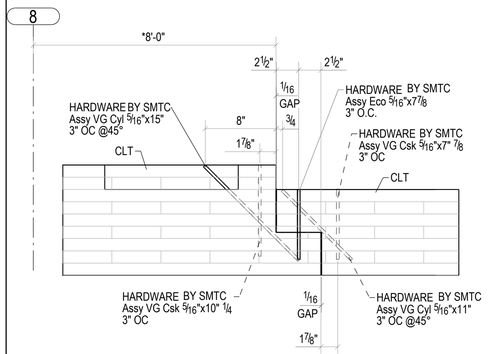

DETAIL 7

REF. :4/S405
TYP CLT ROOF PANEL LAP JOINT

FULLY THREADED (VG) SCREWS SHOP INSTALLED BEFORE ERECTION.

USE 45° JIG FOR INCLINED VG SCREWS

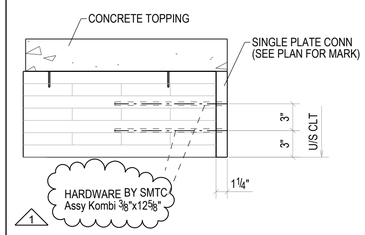

DETAIL 8

REF. :9/S405
TYP CLT EDGE PL DETAIL

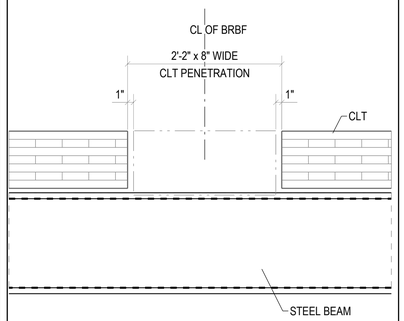

DETAIL 10

REF. :5/S520
BRBF ROOF DIAPHRAGM CONNECTION

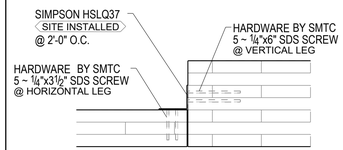

DETAIL 11

REF. :12/S405
CLT STEP DETAIL @ GRIDLINE 3
@ ROOF LEVEL ONLY

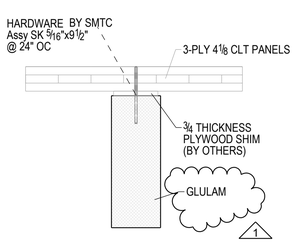

TYP. DETAIL FOR 3-PLY 4⅛" CLT PANELS

REF. :1/S405
TYP CLT TO BEAM CONN DETAIL

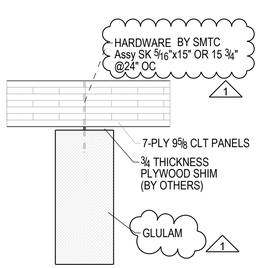

TYP. DETAIL FOR 7-PLY 9⅝" CLT PANELS

REF. :1/S405
TYP CLT TO BEAM CONN DETAIL

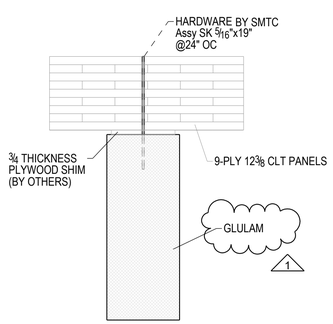

TYP. DETAIL FOR 9-PLY 12⅜" CLT PANELS

REF. :1/S404
TYP CLT TO BEAM CONN DETAIL

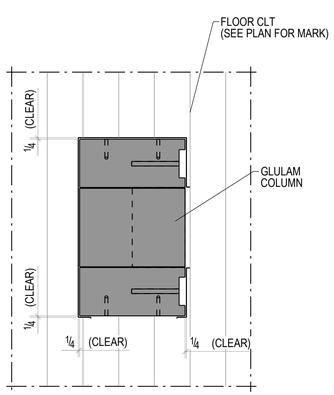

TYP. CLT CUT OUT FOR BRB COLUMN LOCATIONS

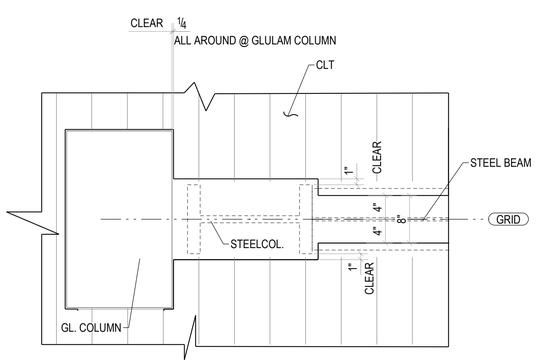

TYP. CLT CUT OUT FOR BRB AREA

REV	DATE	REMARKS
1	12/31/2020	SMTC IFF layout revisions
0	04/30/2020	IFF
D	03/04/2020	Area B OFA 3
C	02/05/2020	Area B OFA
B	01/17/2020	Area A OFA glulam
A	12/11/2019	Area B OFA

Ref Dwg:

ISSUED SMTC IFF layo

DATE: 12/31/2020

STRUCTURLAM
MASS TIMBER CORPORATION
Intelligence In Wood

DATE 11/Dec/2019
BY JMI
SHEET SL37
REV. 1
DWG TITLE DETAILS & SECTIONS

PROJECT
BORREGAS
Job# 25991

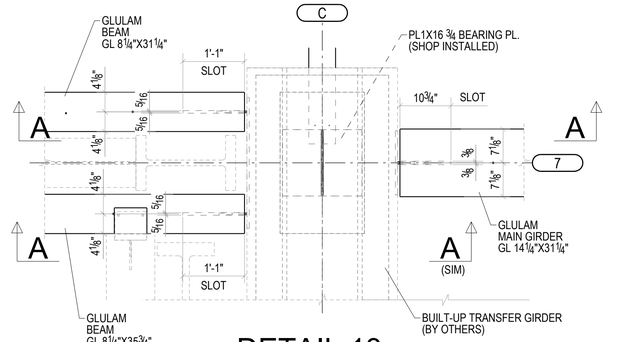

DETAIL 13
REF. :3/S503
TRANSFER BEAM DET. @ GRL 7

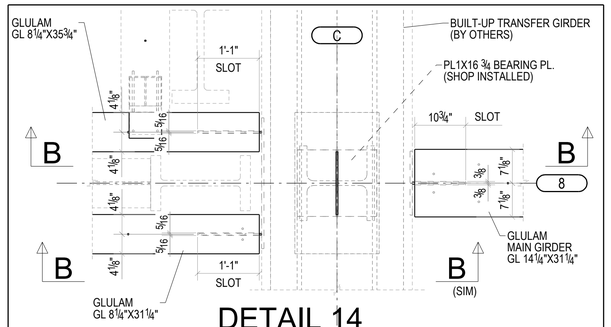

DETAIL 14
REF. :4/S502
TRANSFER BEAM DET. @ GRL 8

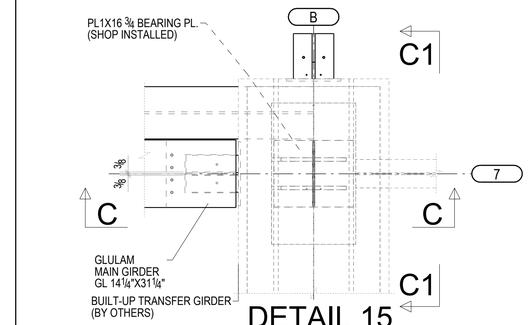

DETAIL 15
REF. :5/S502
TRANSFER BEAM DET. @ GRL 7

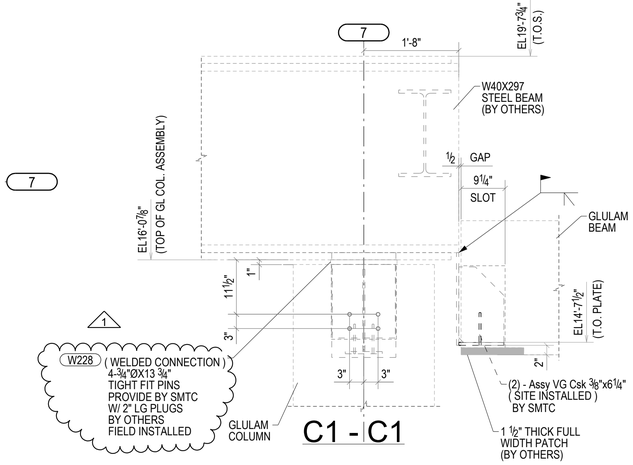

C1 - C1

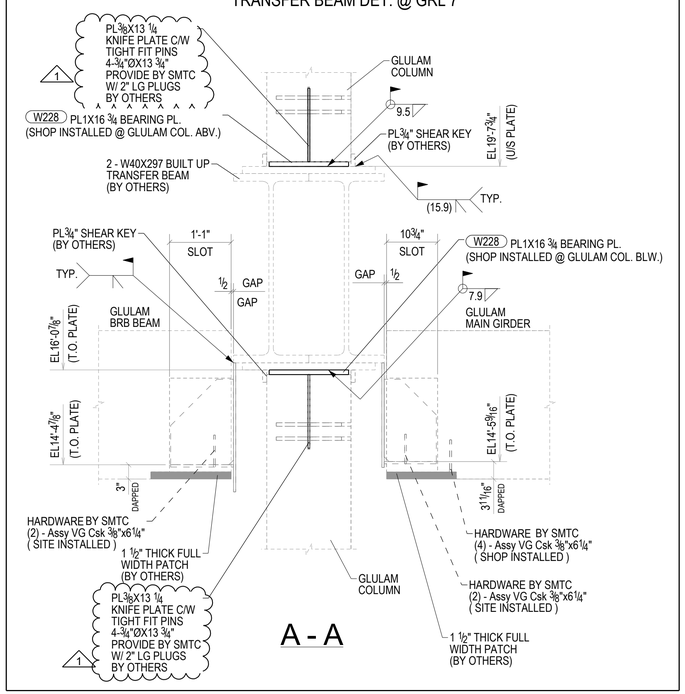

A - A

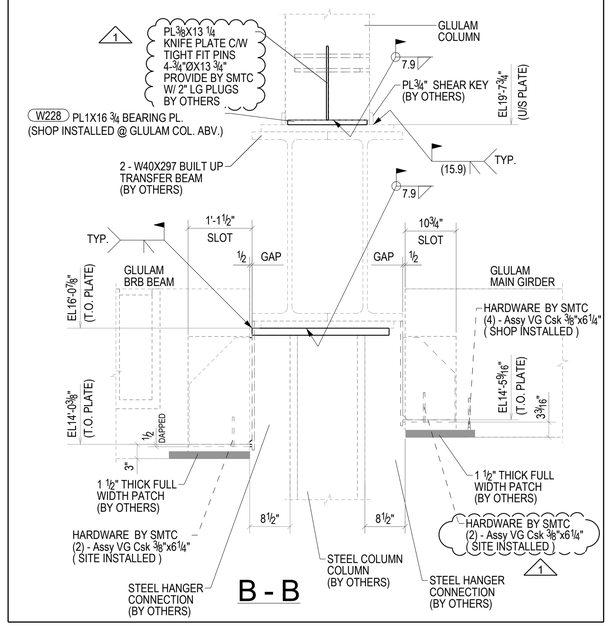

B - B

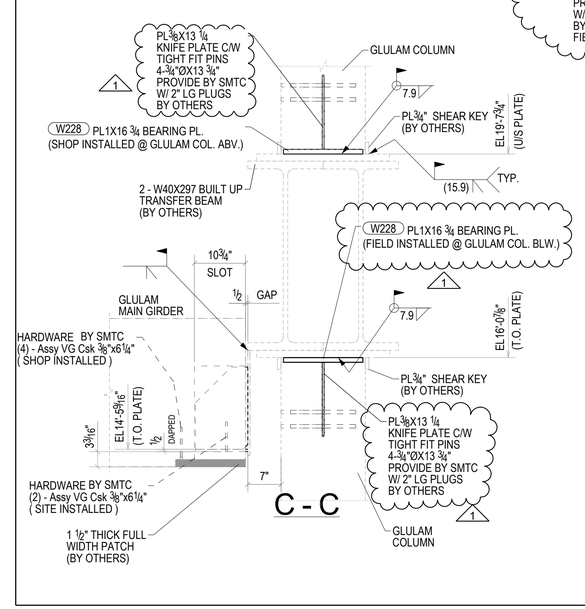

C - C

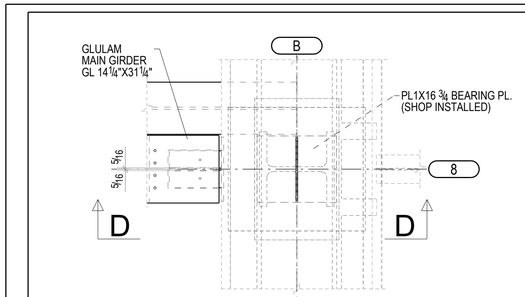

DETAIL 16
REF. :3/S502
TRANSFER BEAM DET. @ GRL 8

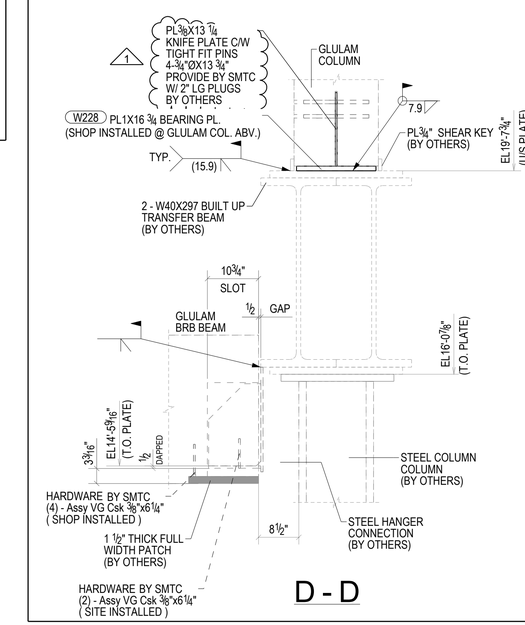

D - D

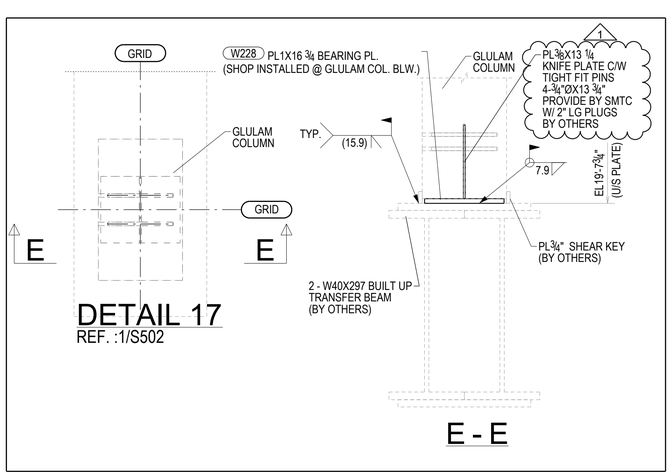

DETAIL 17
REF. :1/S502

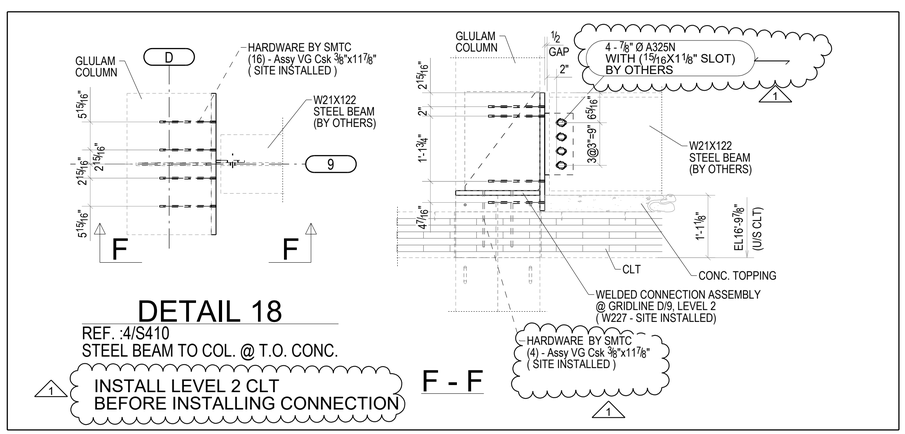

DETAIL 18
REF. :4/S410
STEEL BEAM TO COL. @ T.O. CONC.

F - F

E - E

REV	DATE	REMARKS
1	12/31/2020	SMTC IFF layout revisions
0	04/30/2020	IFF
E	03/04/2020	Area B OFA 3
D	02/07/2020	Area B OFA
C	02/05/2020	Area B OFA
B	01/17/2020	Area A OFA glulam
A	12/11/2019	Area B OFA

Ref Dwg:

ISSUED SMTC IFF layo

DATE: 12/31/2020

STRUCTURLAM MASS TIMBER CORPORATION
Intelligence In Wood

DATE 11/Dec/2019	SHEET	REV.	PROJECT
BY JMI	SL38	1	BORREGAS
DWG TITLE DETAILS & SECTIONS			Job# 25991

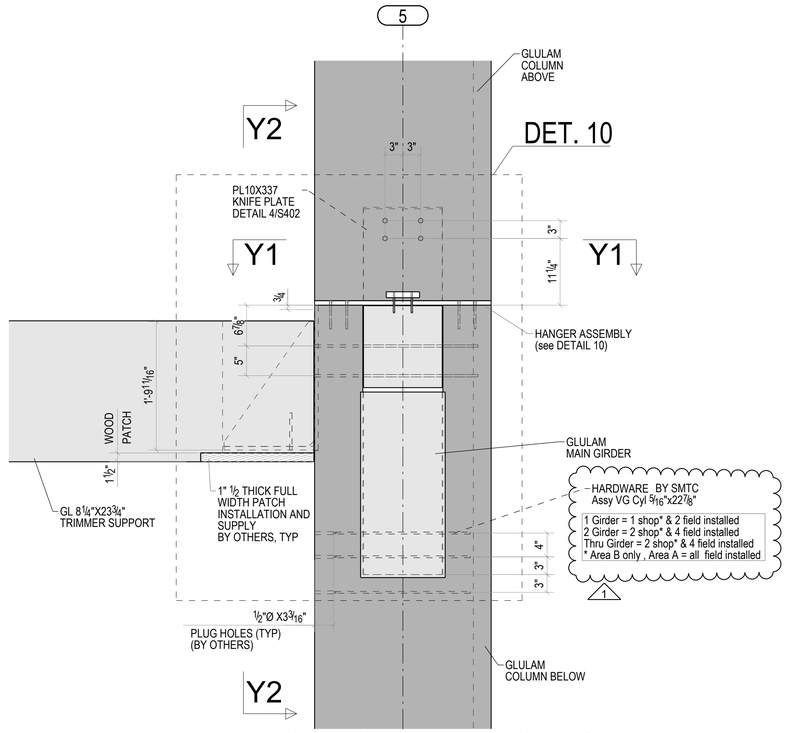

Y - Y
COLUMN BEARING PLATE HANGER

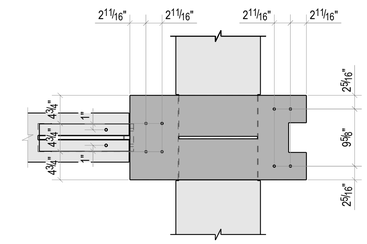

Y1 - Y1

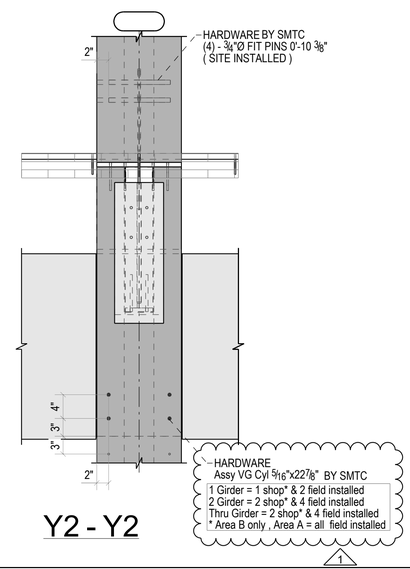

Y2 - Y2

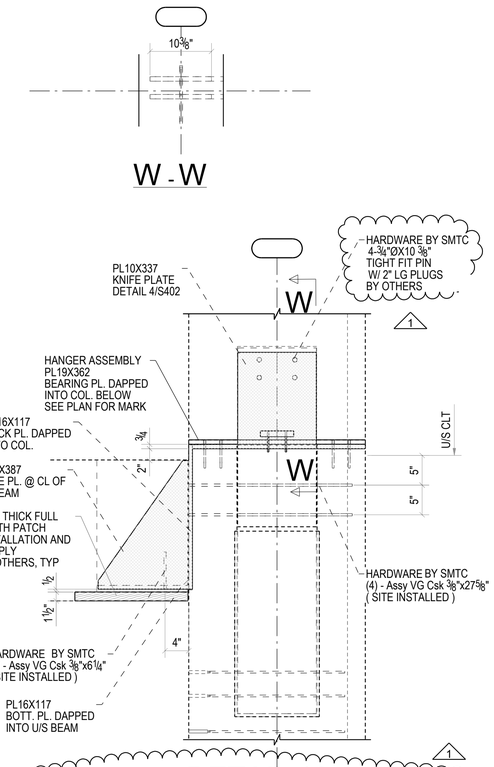

DETAIL 10
COLUMN BEARING PLATE HANGER STEEL VIEW

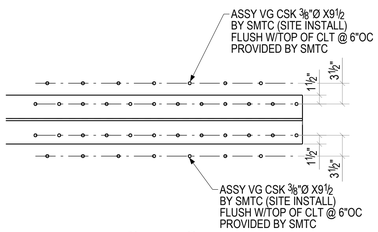

Z3 - Z3
REF. 5/S501
ADDITIONAL SCREWS AT OVERFRAME DETAIL

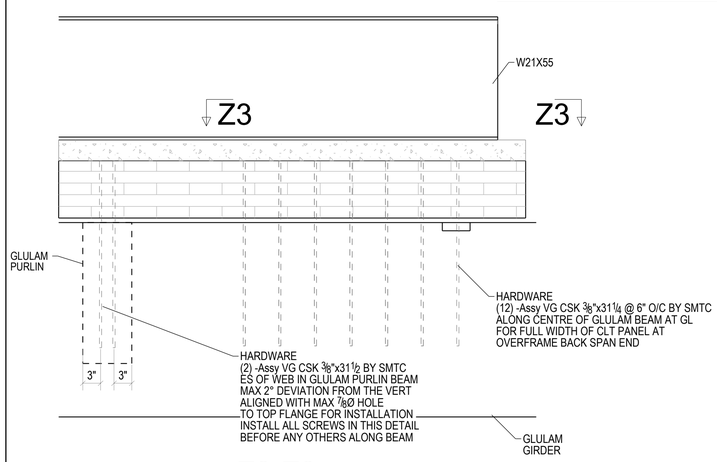

Z2-Z2
REF. 1C/S501
TYP STEEL OVERFRAME @ FLOOR

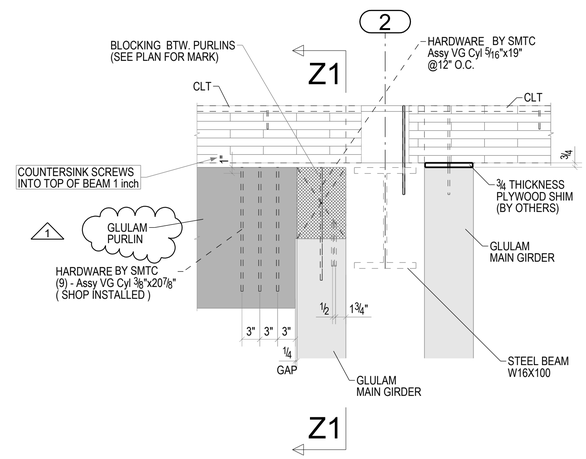

Z - Z
REF. :5/S404
TYP @ GL PURLIN NOTCHED
TO BRACE BAY GIRDER

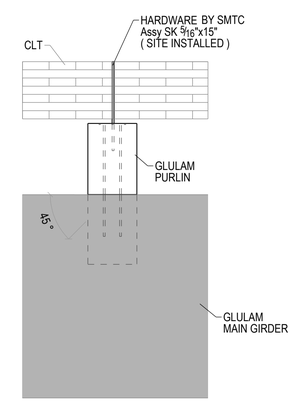

Z1 - Z1

NOTES:

1. MINIMUM DIMENSION FROM UNDERSIDE OF CLT TO UNDERSIDE OF COL-COL BEARING PLATE IS 1-⅞" TYP. SEE STRUCT

2. WOOD PATCHING AND PLUGGING BY OTHERS, TYP.

3. ALL STEEL CONNECTIONS FOR GRAVITY SYSTEM TO BE FIRE PROTECTED. RATING TO BE ACHEIVED BY INTUMESCENT COATINGS OR WOOD ENCASEMENT.

4. WOOD ENCASEMENT TO MEET DEPTH COVERAGE REQUIREMENTS; REFERENCE NDS SECTION 16.2.1 FOR EFFECTIVE CHAR RATES FOR FIRE ENDURANCE AND STRUCTURAL CALCULATION PACKAGE FOR CALCULATED CHAR RATE OF MASS TIMBER ELEMENTS

REV	DATE	REMARKS
1	12/31/2020	SMTC IFF layout revisions
0	04/30/2020	IFF
D	03/04/2020	Area B OFA 3
C	02/05/2020	Area B OFA
B	01/17/2020	Area A OFA glulam
A	12/12/2019	Area B OFA

Ref Dwg:

ISSUED SMTC IFF layo

DATE: 12/31/2020

STRUCTURLAM
MASS TIMBER CORPORATION
Intelligence In Wood

DATE 12/Dec/2019

BY VCO

DWG TITLE DETAILS & SECTIONS

SHEET SL39

REV. 1

PROJECT

BORREGAS

Job# 25991

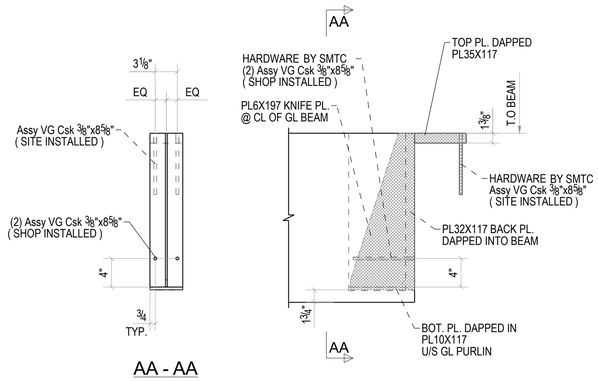

AA - AA

HANGER ELEVATION-H1

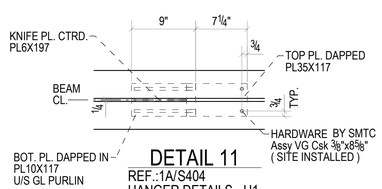

DETAIL 11

REF.:1A/S404
HANGER DETAILS - H1

HANGER PLAN - H1

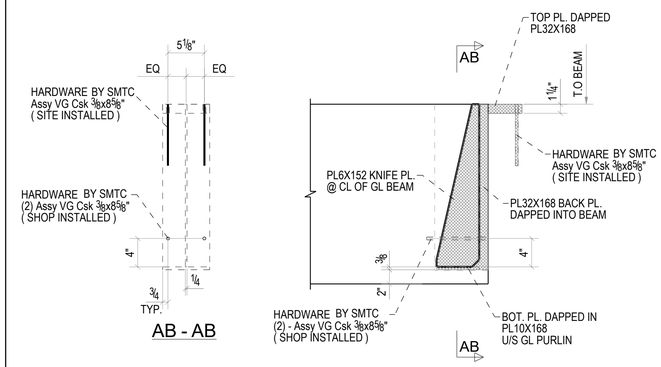

AB - AB

HANGER ELEVATION-H2

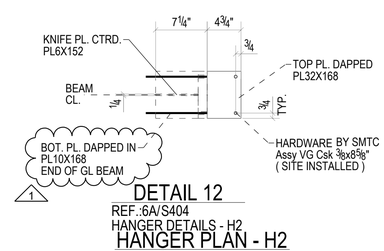

DETAIL 12

REF.:6A/S404
HANGER DETAILS - H2

HANGER PLAN - H2

REV	DATE	REMARKS
1	12/31/2020	SMTC IFF layout revisions
0	04/30/2020	IFF
C	03/04/2020	Area B OFA 3
B	02/05/2020	Area B OFA
A	01/17/2020	Area B OFA

Ref Dwg:

ISSUED SMTC IFF layo

DATE: 12/31/2020

STRUCTURLAM
MASS TIMBER CORPORATION
Intelligence In Wood

DATE 17/Jan/2020	SHEET	REV.	PROJECT
BY JMI	SL40	1	BORREGAS
DWG TITLE DETAILS & SECTIONS			Job# 25991

CLT PANEL SCHEDULE

MARK	LAYERS	LAYER ORIENTATION (°)	SPECIES	GRADE	LAYER DEPTH
105 ED-1C	1	0	SPF	2100f-1.8E MSR	35
	2	90	SPF	No. 2	35
	3	0	D. Fir	D. Fir #2 SE	35
245 VD-1	1	0	SPF	No. 2	35
	2	90	SPF	No. 2	35
	3	0	SPF	No. 2	35
	4	90	SPF	No. 2	35
	5	0	SPF	No. 2	35
	6	90	SPF	No. 2	35
	7	0	D. Fir	D. Fir #2 SE	35
315 VD-1	1	0	SPF	No. 2	35
	2	90	SPF	No. 2	35
	3	0	SPF	No. 2	35
	4	90	SPF	No. 2	35
	5	0	SPF	No. 2	35
	6	90	SPF	No. 2	35
	7	0	SPF	No. 2	35
	8	90	SPF	No. 2	35
	9	0	D. Fir	D. Fir #2 SE	35
245 VD-1 XL	1	0	SPF	No. 2	35
	2	0	SPF	No. 2	35
	3	90	SPF	No. 2	35
	4	0	SPF	No. 2	35
	5	90	SPF	No. 2	35
	6	0	SPF	No. 2	35
	7	0	D. Fir	D. Fir #2 SE	35

REV	DATE	REMARKS
0	04/30/2020	IFF
C	03/04/2020	Area B OFA 3
B	02/05/2020	Area B OFA
A	01/22/2020	Area B OFA

Ref Dwg:

ISSUED IFF

DATE: 04/30/2020

STRUCTURLAM
MASS TIMBER CORPORATION
Intelligence In Wood

DATE 24/Jan/2020
BY VCO
SHEET SL41
REV. 0
DWG TITLE CLT SCHEDULE

PROJECT
BORREGAS
Job# 25991

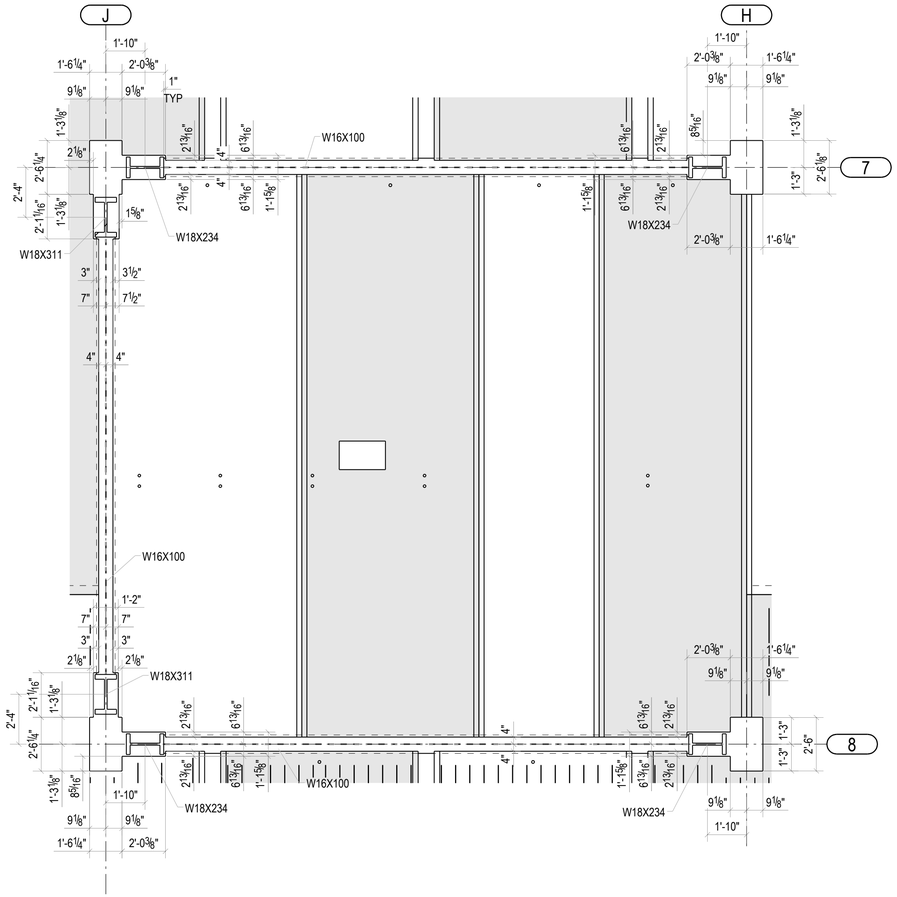

DETAIL 2A
SL24

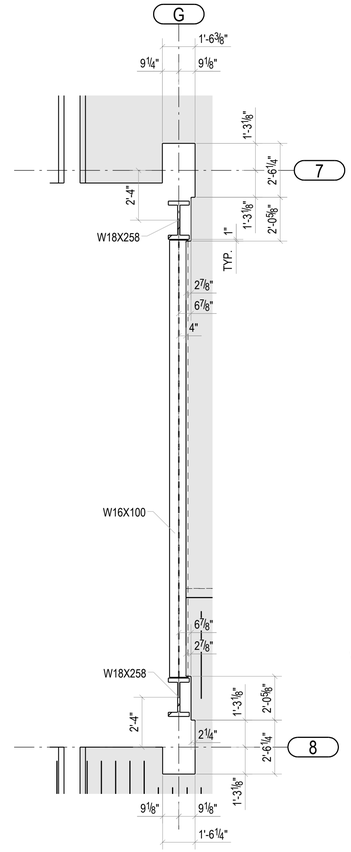

DETAIL 2B
SL24

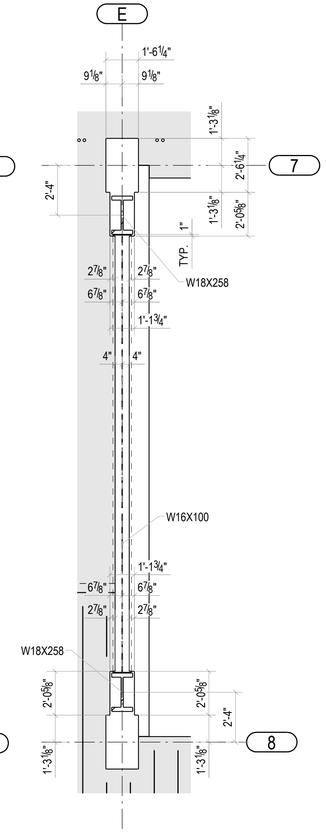

DETAIL 2C
SL24

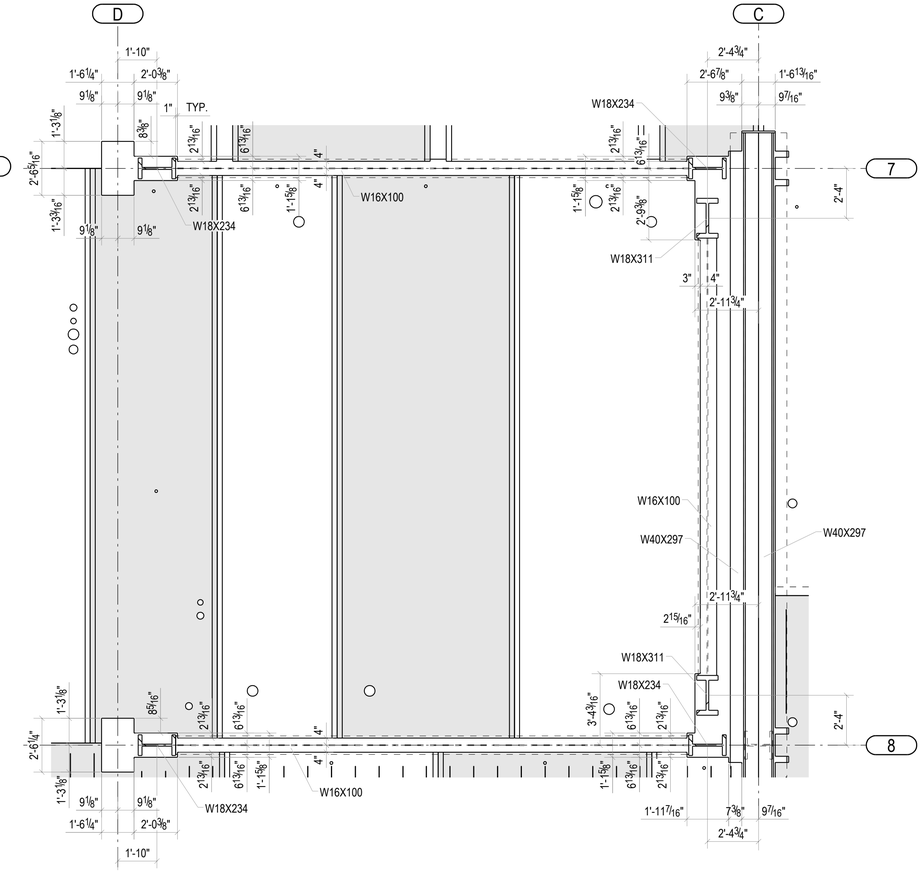

DETAIL 2D
SL24

REV	DATE	REMARKS
0	04/30/2020	IFF
B	03/04/2020	Area B OFA 3
A	02/07/2020	Area B OFA

Ref Dwg:

ISSUED IFF

DATE: 04/30/2020

STRUCTURLAM
MASS TIMBER CORPORATION
Intelligence In Wood

DATE 07/Feb/2020	SHEET	REV.	PROJECT
BY LIG	SL42	0	BORREGAS
DWG TITLE BRB STEEL CUT OUT LEVEL 2			Job# 25991

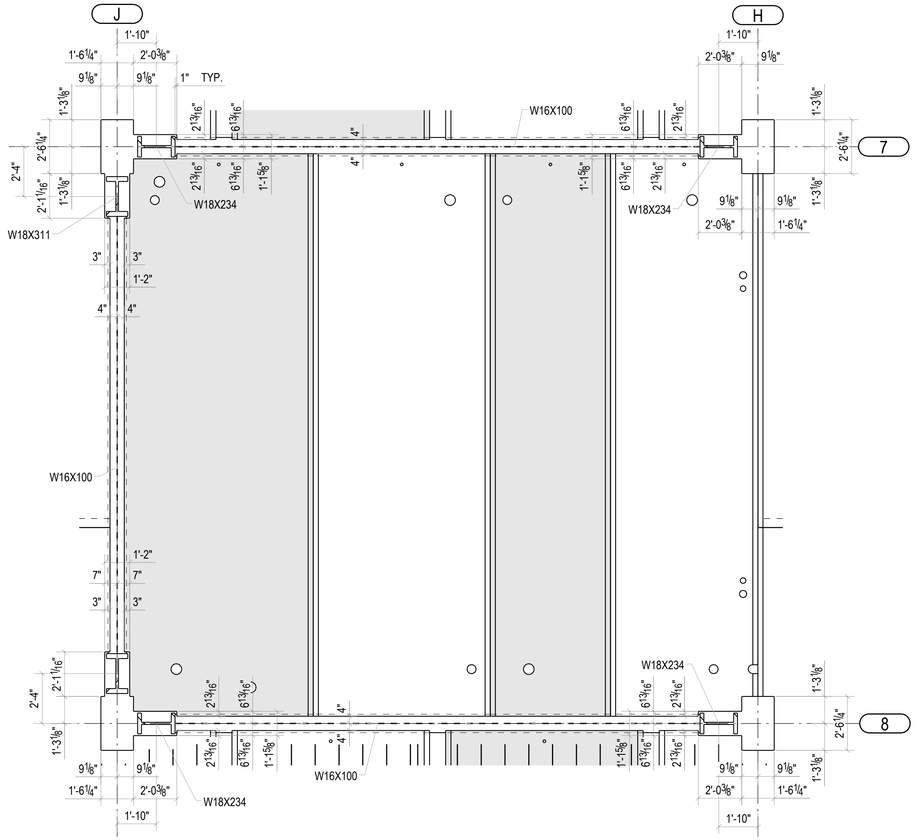

DETAIL 3A
SL25

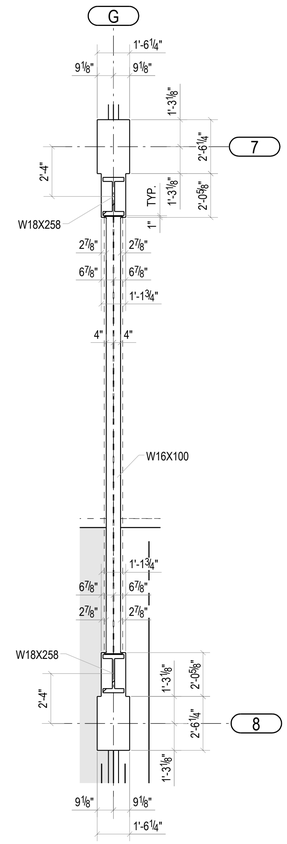

DETAIL 3B
SL25

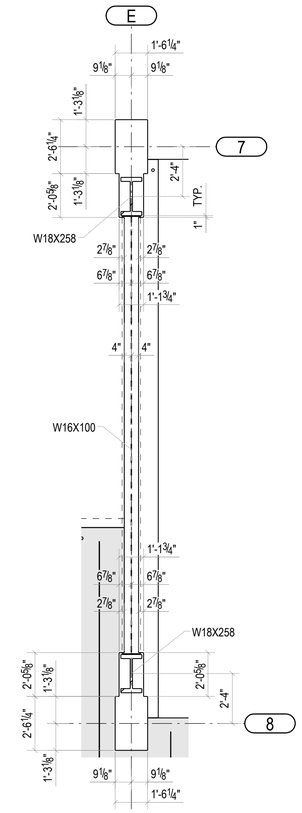

DETAIL 3C
SL25

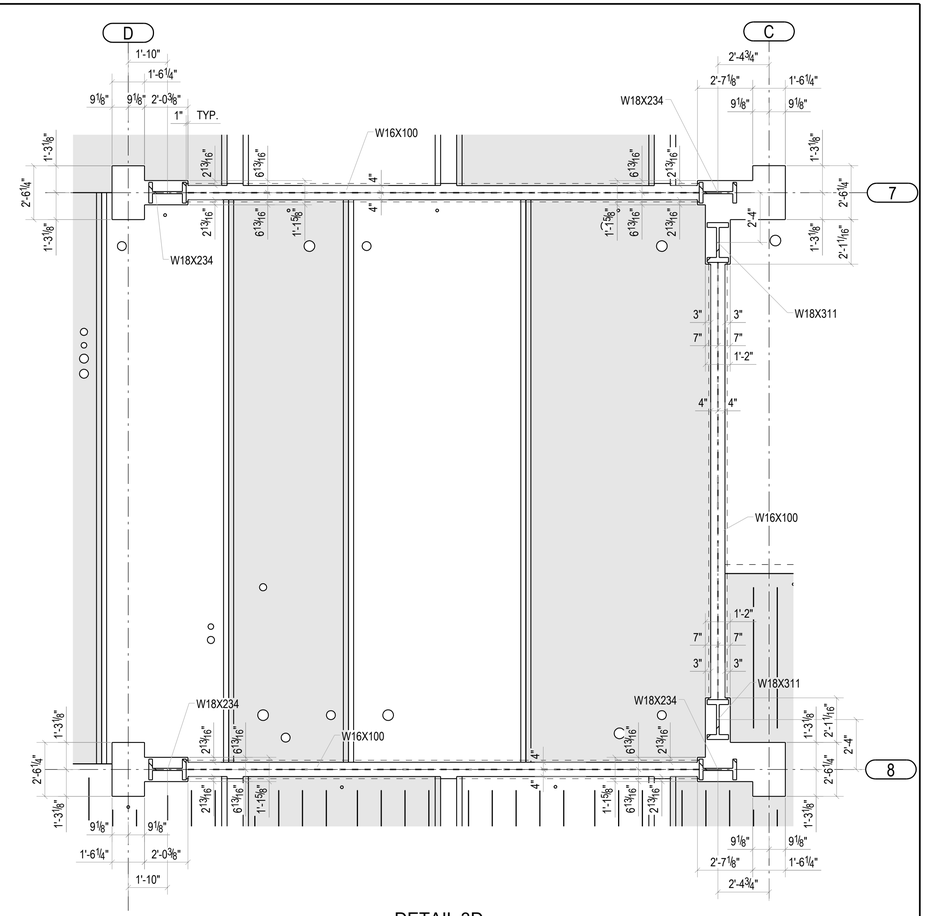

DETAIL 3D
SL25

REV	DATE	REMARKS
0	04/30/2020	IFF
B	03/04/2020	Area B OFA 3
A	02/07/2020	Area B OFA

Ref Dwg:

ISSUED IFF

DATE: 04/30/2020

STRUCTURLAM
MASS TIMBER CORPORATION
Intelligence In Wood

DATE 07/Feb/2020	SHEET	REV.	PROJECT
BY LIG	SL43	0	BORREGAS
DWG TITLE BRB STEEL CUT OUT LEVEL 3			Job# 25991

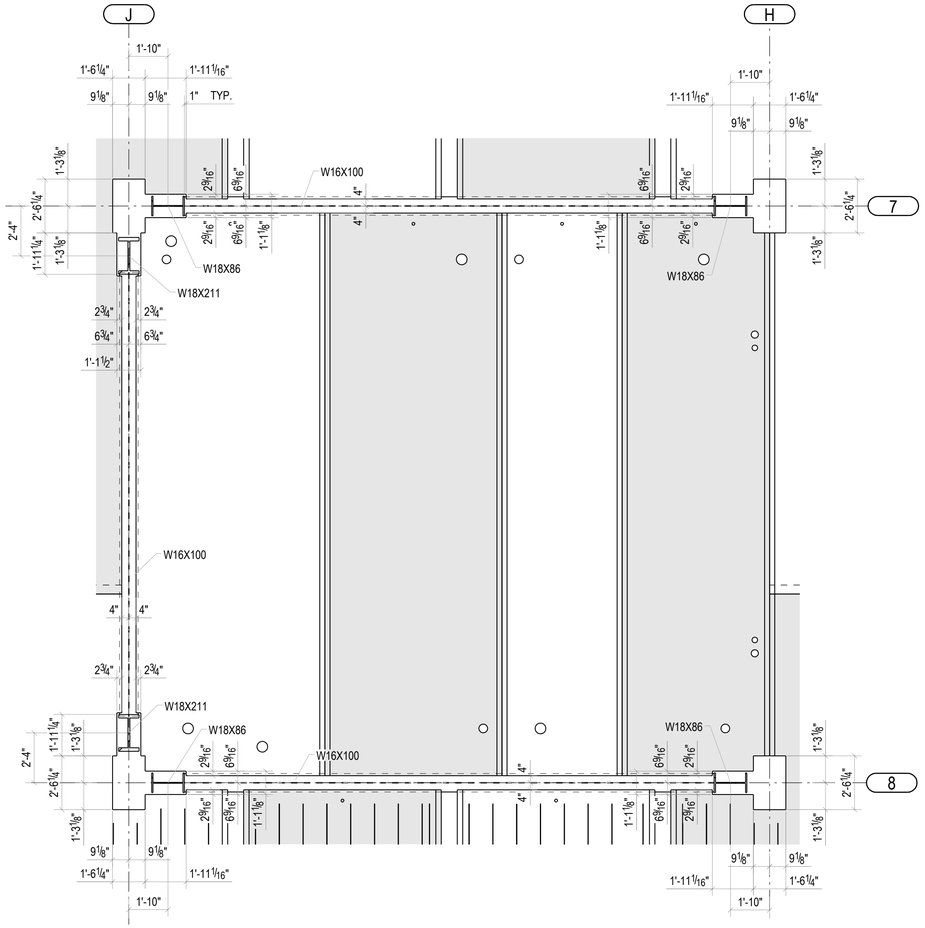

DETAIL 4A
SL26

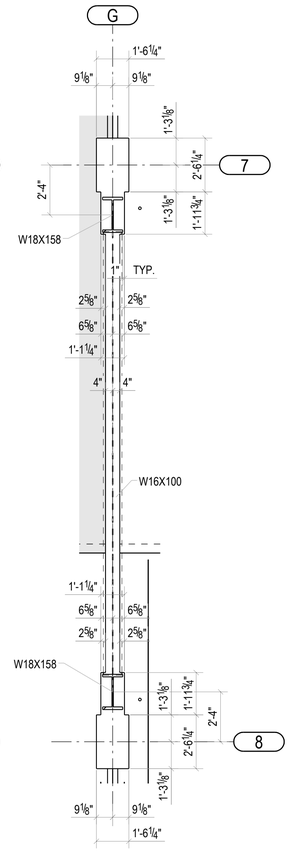

DETAIL 4B
SL26

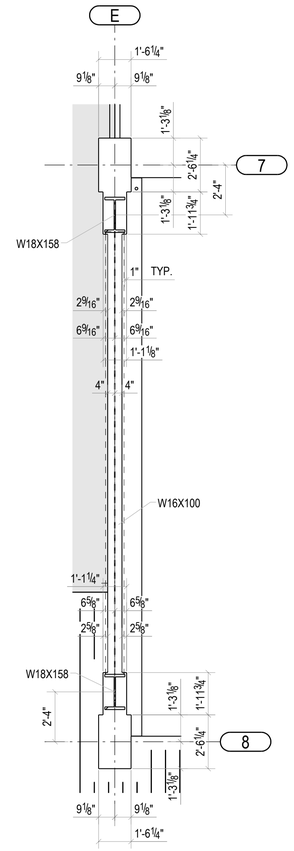

DETAIL 4C
SL26

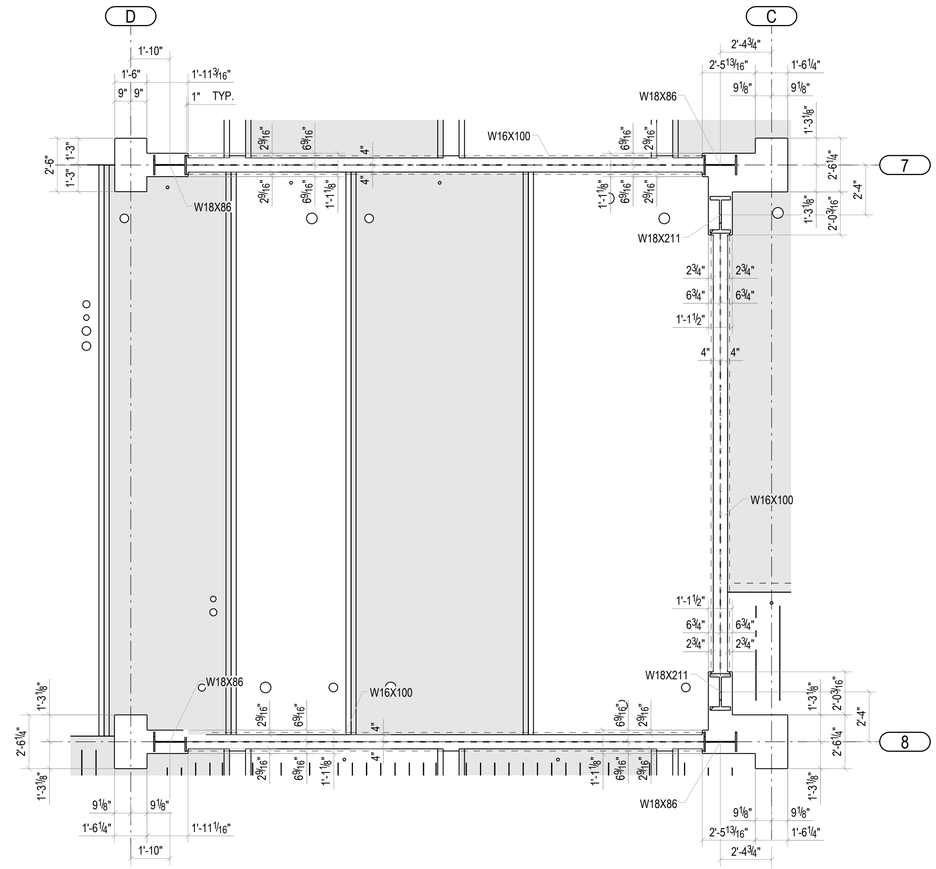

DETAIL 4D
SL26

REV	DATE	REMARKS
0	04/30/2020	IFF
B	03/04/2020	Area B OFA 3
A	02/07/2020	Area B OFA

Ref Dwg:

ISSUED IFF

DATE: 04/30/2020

STRUCTURLAM
MASS TIMBER CORPORATION
Intelligence In Wood

DATE 07/Feb/2020	SHEET	REV.	PROJECT
BY LIG	SL44	0	BORREGAS
DWG TITLE BRB STEEL CUT OUT LEVEL 4			Job# 25991

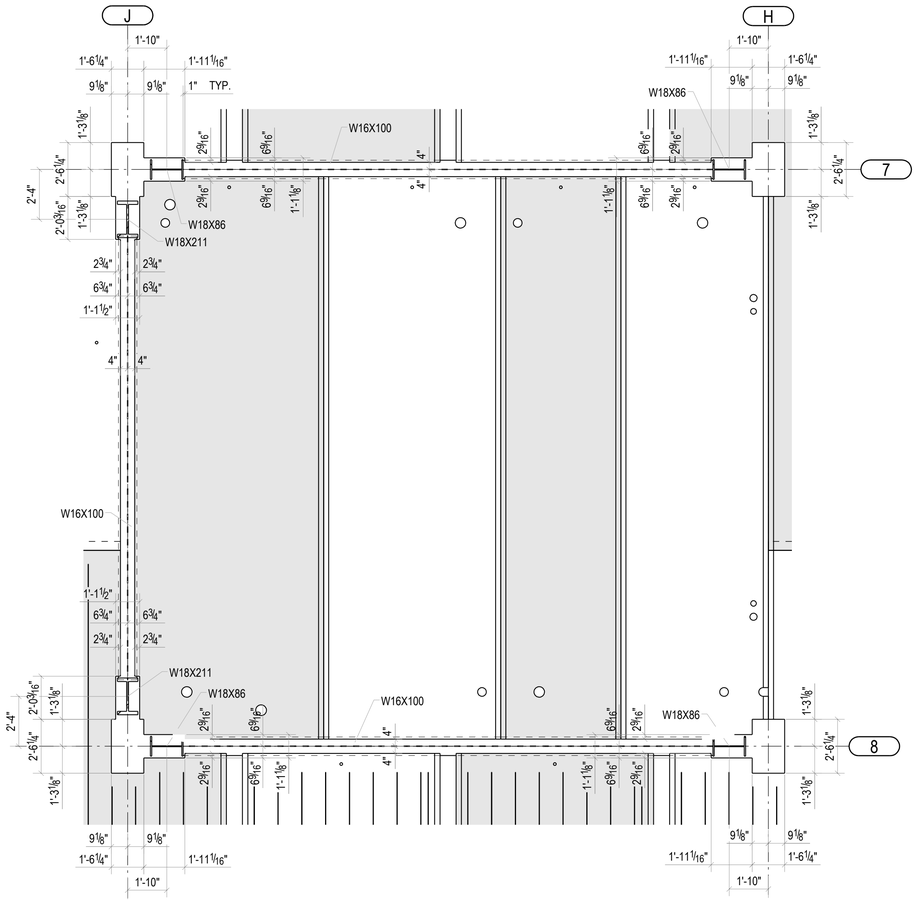

DETAIL 5A
SL27

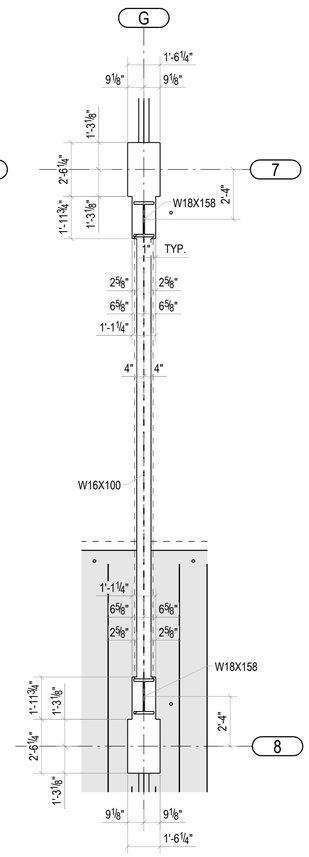

DETAIL 5B
SL27

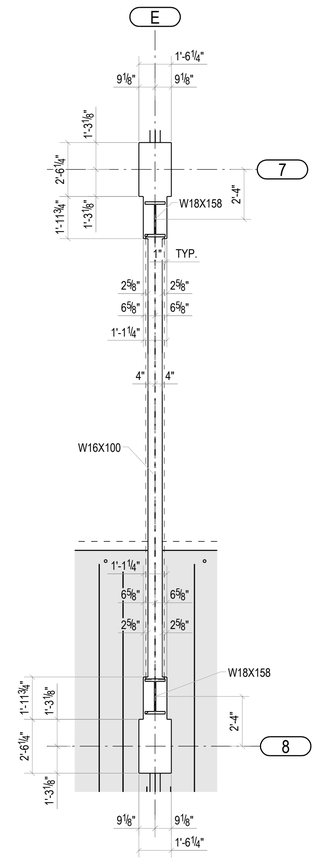

DETAIL 5C
SL27

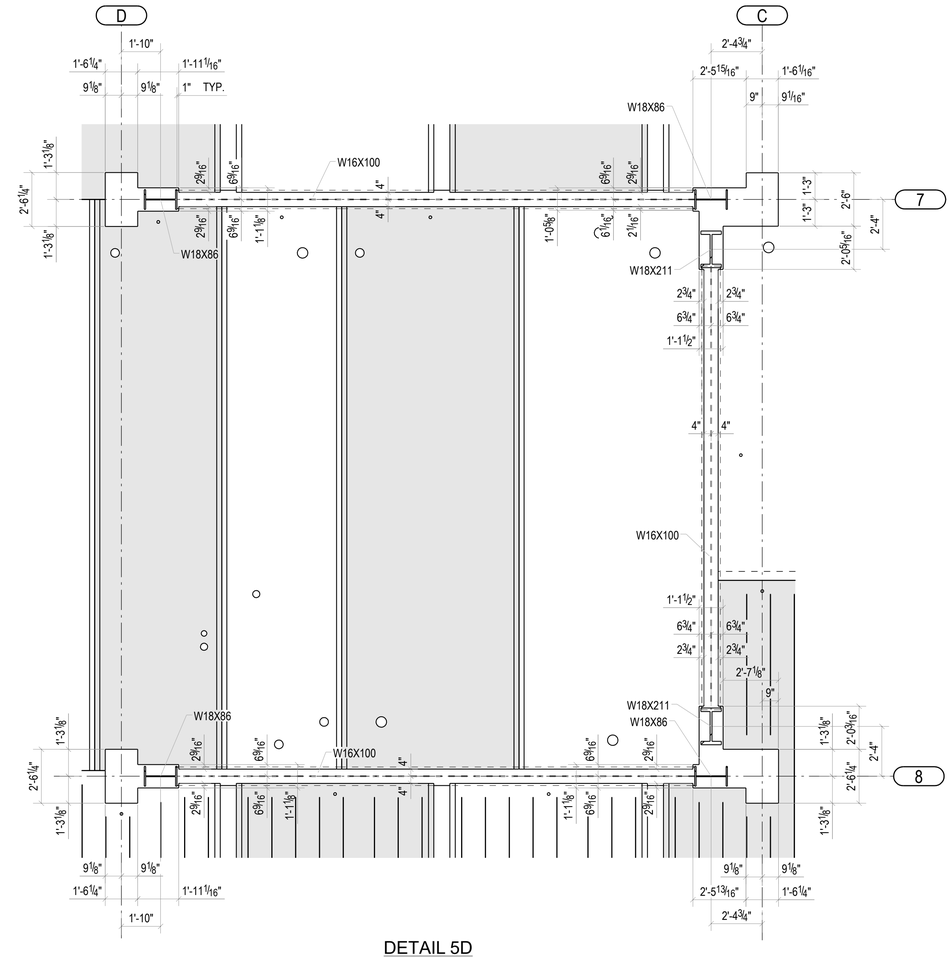

DETAIL 5D
SL27

REV	DATE	REMARKS
0	04/30/2020	IFF
B	03/04/2020	Area B OFA 3
A	02/07/2020	Area B OFA

Ref Dwg:

ISSUED IFF

DATE: 04/30/2020

STRUCTURLAM
MASS TIMBER CORPORATION
Intelligence In Wood

DATE 07/Feb/2020	SHEET	REV.	PROJECT
BY LIG	SL45	0	BORREGAS
DWG TITLE BRB STEEL CUT OUT LEVEL 5			Job# 25991